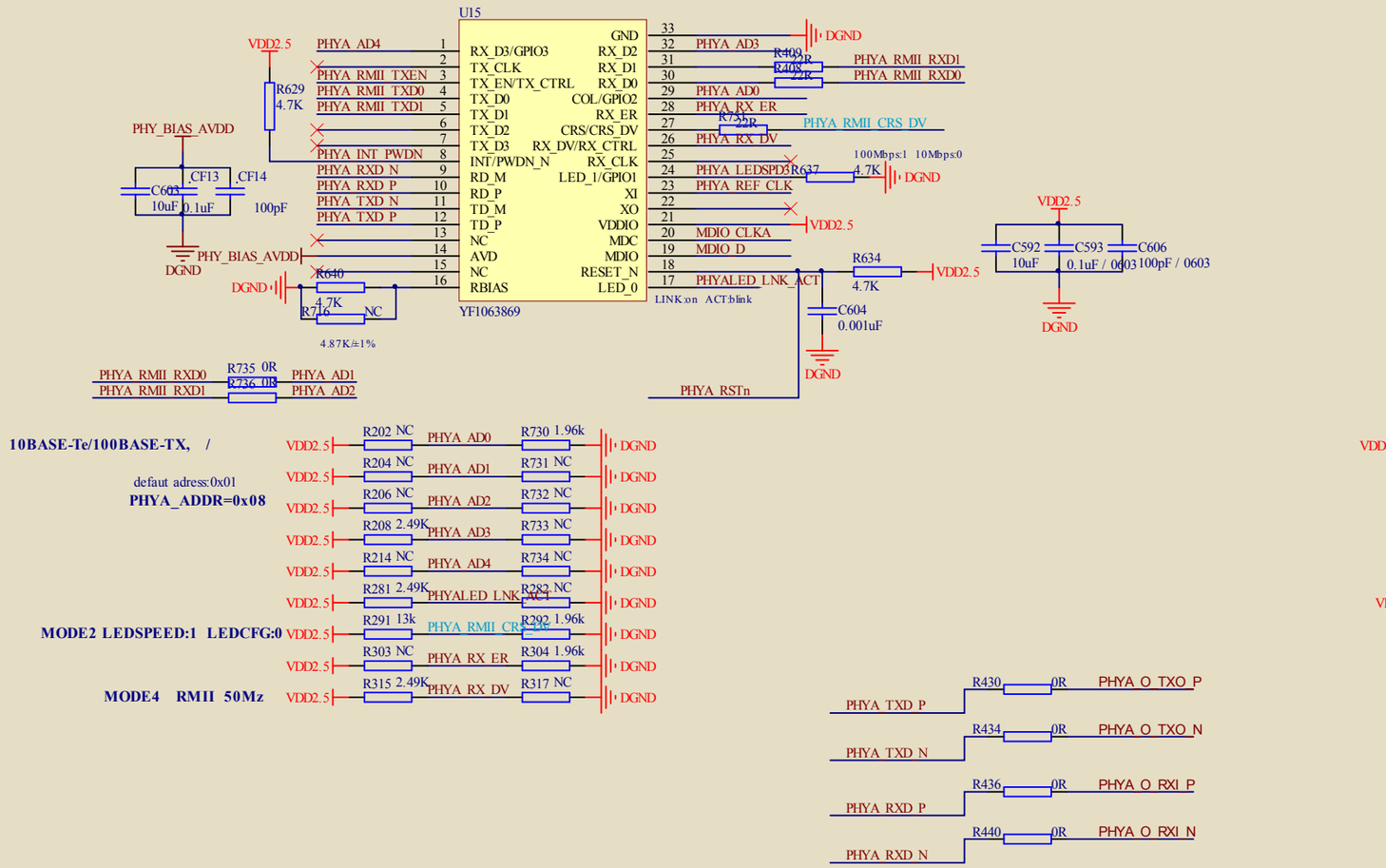

10BASE-Te/100BASE-TX, /

defaut adress:0x01

PHYA_ADDR=0x08

MODE2 LEDSPEED:1 LEDCFG:0
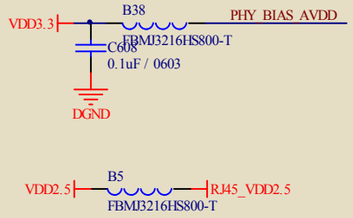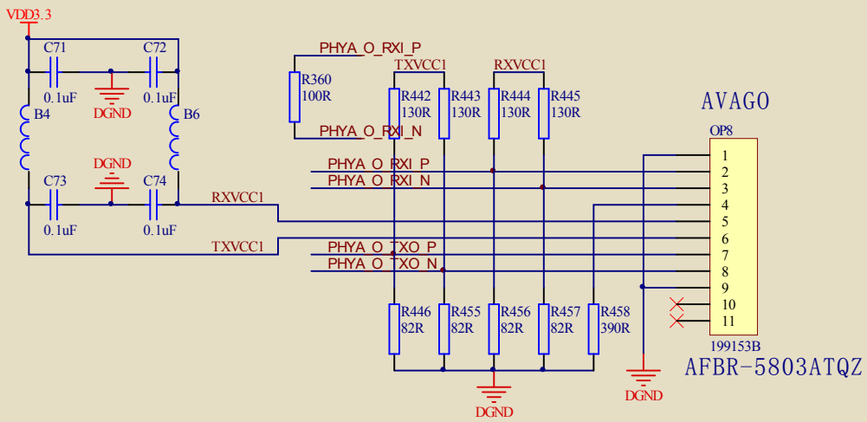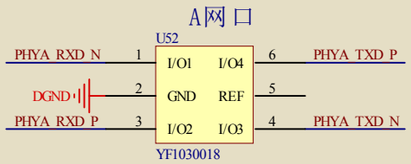
MODE4 RMII 50Mz