Digital Input
Input Channels: 3
Isolation: 2.5KVdc
Digital Input Level:
Dry Contact: Logic level 0: open
Logic level 1: close to GND
Wet Contact: Logic level 0: 2V max.
Logic level 1: 10 to 50V

Digital Output
Output Channels: 3
Isolation: 2.5KVdc
Output Voltage: open collector to 30V, 8mA max. load

Address Reference Table
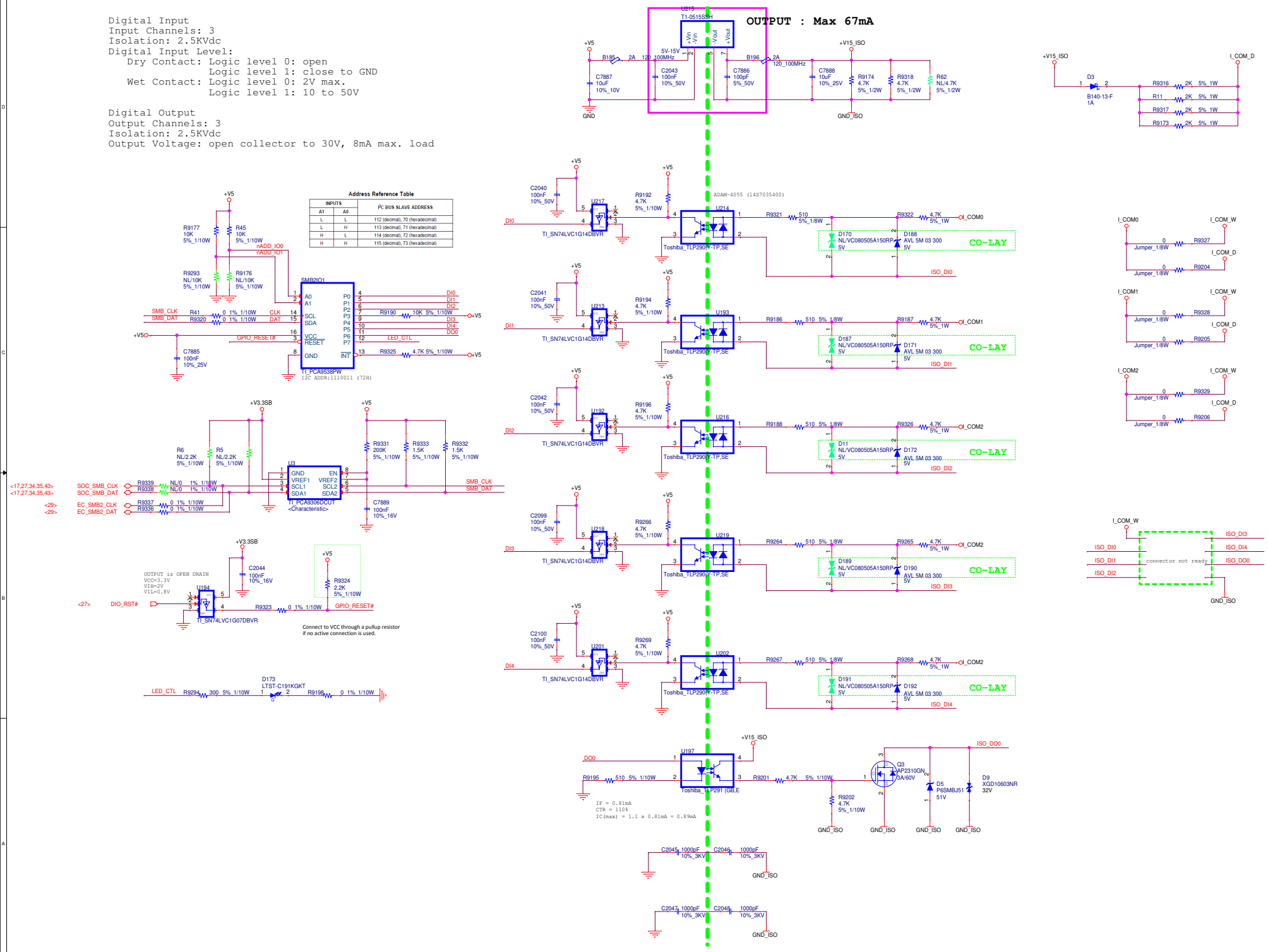
INPUTS		I²C BUS SLAVE ADDRESS
A1	A0	
L	L	112 (decimal), 70 (hexadecimal)
L	H	113 (decimal), 71 (hexadecimal)
H	L	114 (decimal), 72 (hexadecimal)
H	H	115 (decimal), 73 (hexadecimal)