USB PD 3.0 Controller Interface

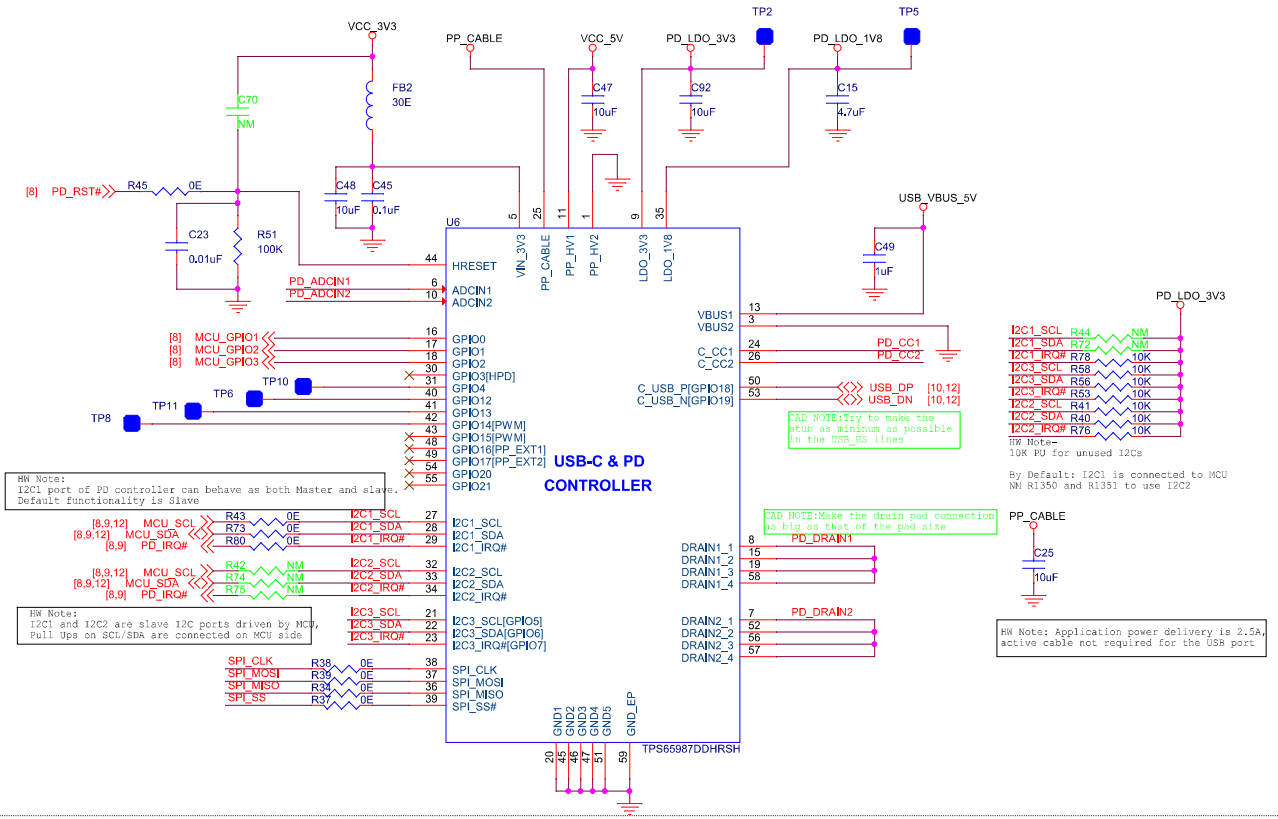

CC Line OVP & Moisture Sensor

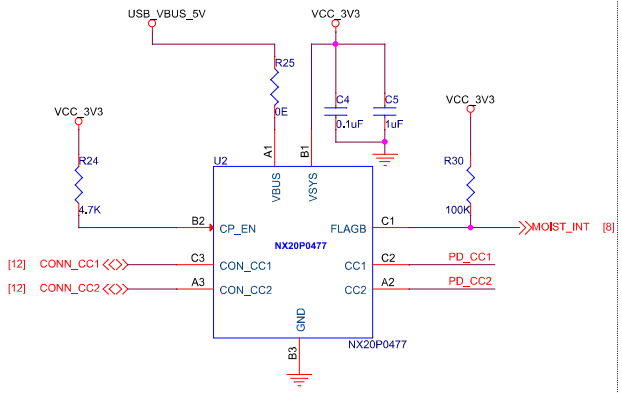

SPI Flash Programming Header

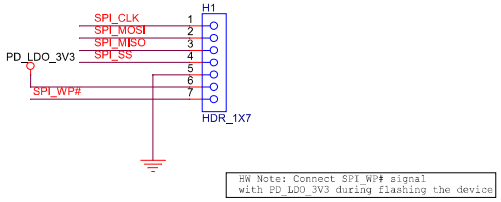

ESD Protection

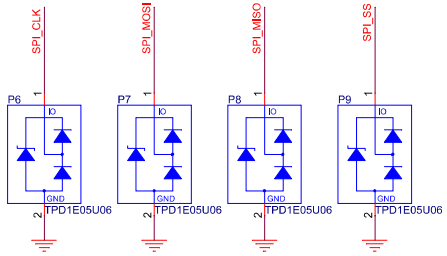

Boot and I2C Slave Addr Configuration

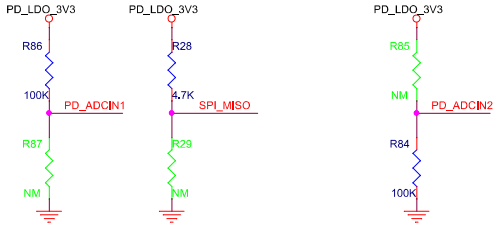

ADCIN1 = 1 and SPI_MISO = 1
Dead Battery Mode -> BP_NoResponse->Safe Configuration

SPI_MISO	ADCIN1 DIV = R2/(R1+R2)		Dead Battery Mode	Device Configuration
	Div min	Div max		
1	0.00	0.18	BP_NoResponse	Safe Configuration

No power switch is enabled and the device does not start-up until VIN_3V3 is present

DIV = R2/(R1+R2)		I2C1 Slave Address
Div min	Div max	
0.00	0.18	000b
0.20	0.38	001b
0.40	0.58	010b
0.60	1.00	011b

SPI NOR Flash

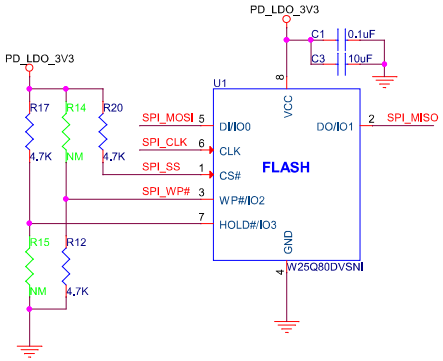

ANSU JBWC

VVDN TECHNOLOGIES	A3	Title : USB PD CONTROLLER
	Fab No : 501-1-01916	Rev: A1
	Asy No : 701-1-02335	Sheet 9 of 13