DDI3_TI-SN75DP126

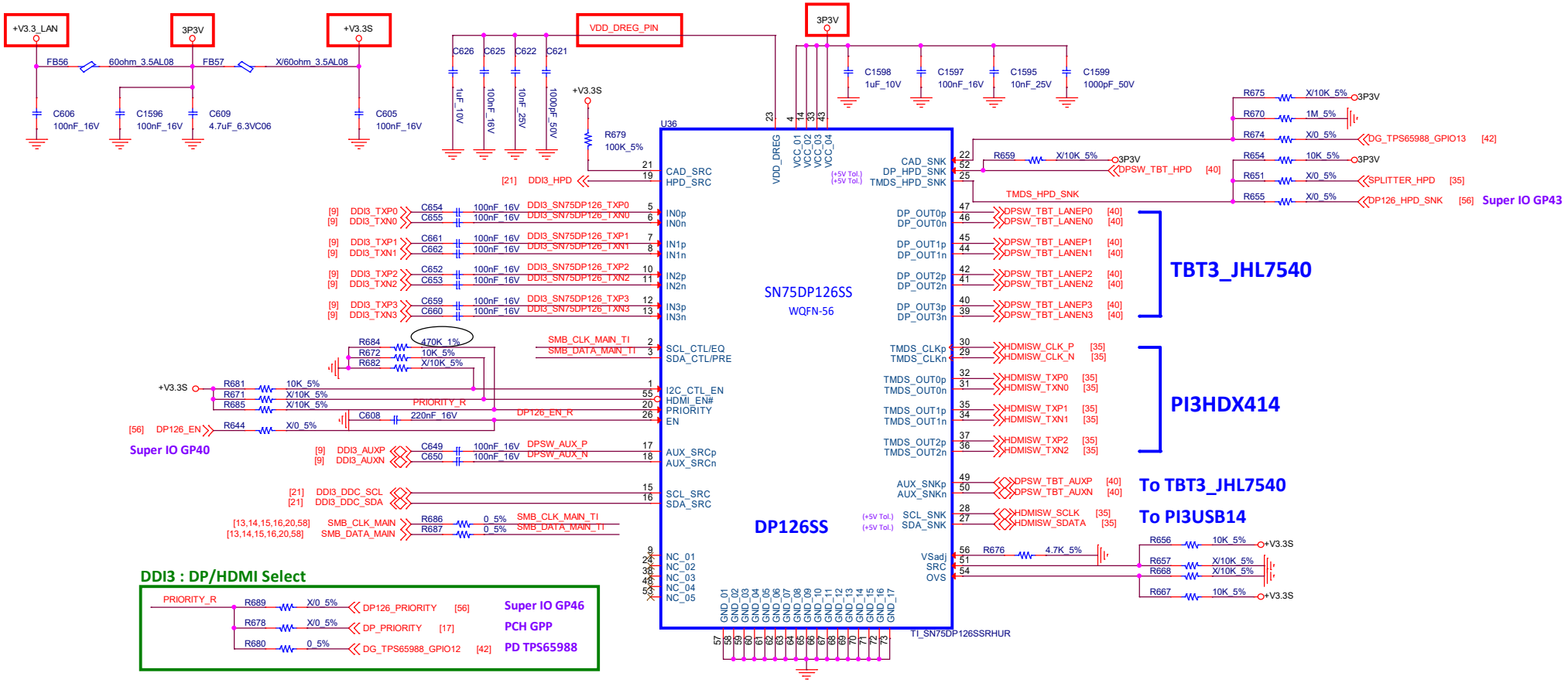

avalue Technology Inc.

Confidential

Project Name	Module Number	Rev
PH370Q2	<Module no.>	Rev

Size	Title	Rev
A3	DDI3_TI-SN75DP126	A0

Date: Wednesday, September 30, 2020 Sheet 34 of 70