T2081 Ethernet 0 PHY

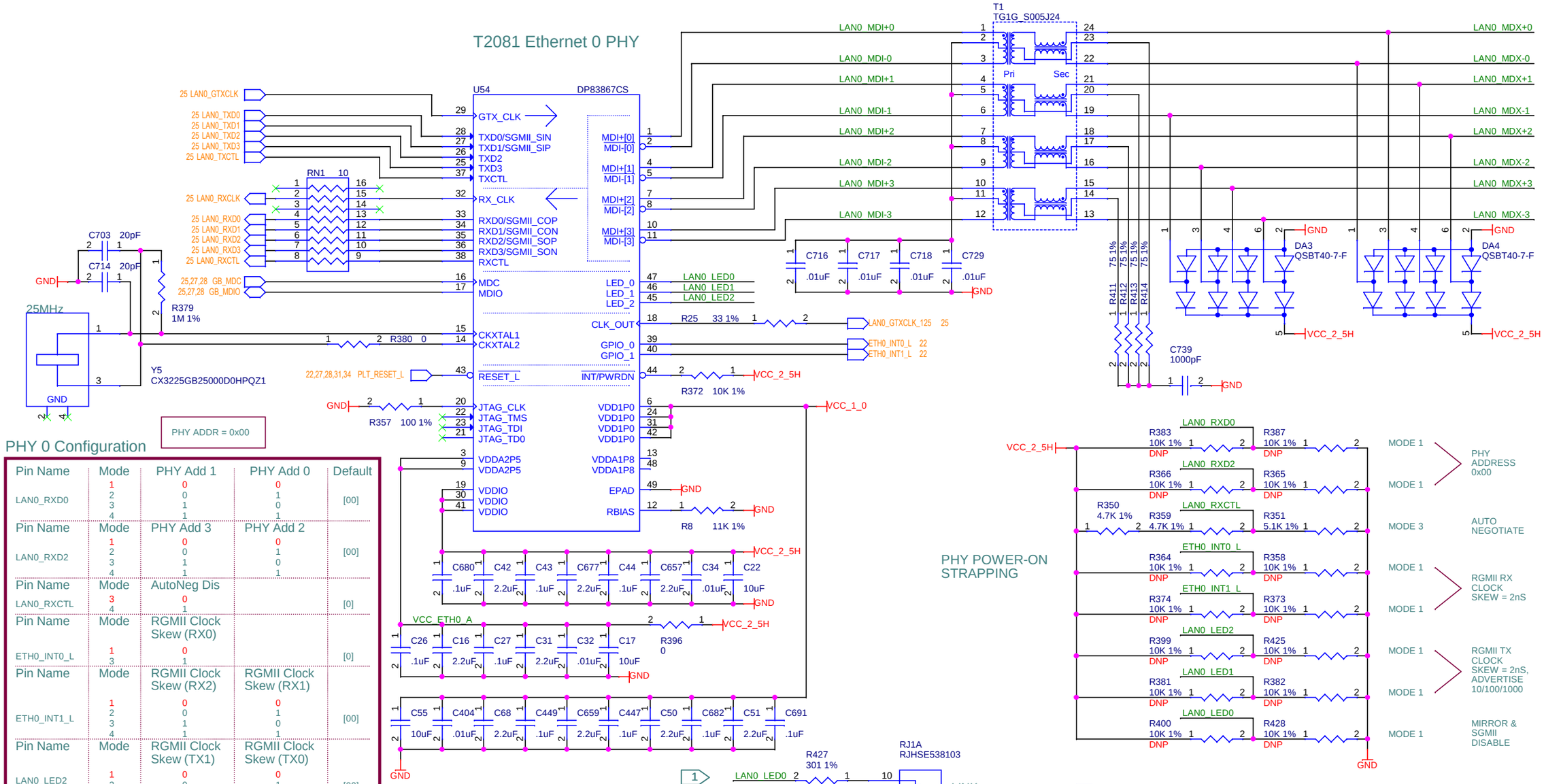

PHY 0 Configuration

Pin Name	Mode	PHY Add 1	PHY Add 0	Default
LAN0_RXD0	1 2 3 4	0 0 1 1	0 1 0 1	[00]
Pin Name	**Mode**	**PHY Add 3**	**PHY Add 2**	
LAN0_RXD2	1 2 3 4	0 0 1 1	0 1 0 1	[00]
Pin Name	**Mode**	**AutoNeg Dis**		
LAN0_RXCTL	3 4	0 1		[0]
Pin Name	**Mode**	**RGMII Clock Skew (RX0)**		
ETH0_INT0_L	1 3	0 1		[0]
Pin Name	**Mode**	**RGMII Clock Skew (RX2)**	**RGMII Clock Skew (RX1)**	
ETH0_INT1_L	1 2 3 4	0 0 1 1	0 1 0 1	[00]
Pin Name	**Mode**	**RGMII Clock Skew (TX1)**	**RGMII Clock Skew (TX0)**	
LAN0_LED2	1 2 3 4	0 0 1 1	0 1 0 1	[00]
Pin Name	**Mode**	**ANEG_SEL**	**RGMII Clock Skew (TX2)**	
LAN0_LED1	1 2 3 4	0 0 1 1	0 1 0 1	[00]
Pin Name	**Mode**	**Mirror Enable**	**SGMII Enable**	
LAN0_LED0	1 2 3 4	0 0 1 1	0 1 0 1	[00]

4-Level Mode Strap Values

Mode	Voltage Min	Voltage Max
1	0V	.245V
2	.35V	.4775V
3	.5625V	.71V
4	1.735V	2.22V

PHY POWER-ON STRAPPING

LAN0_RXD0	R383 10K 1% DNP	R387 10K 1% DNP	MODE 1
LAN0_RXD2	R366 10K 1% DNP	R365 10K 1% DNP	MODE 1
LAN0_RXCTL	R350 4.7K 1% R359 4.7K 1% DNP	R351 5.1K 1% DNP	MODE 3
ETH0_INT0_L	R364 10K 1% DNP	R358 10K 1% DNP	MODE 1
ETH0_INT1_L	R374 10K 1% DNP	R373 10K 1% DNP	MODE 1
LAN0_LED2	R399 10K 1% DNP	R425 10K 1% DNP	MODE 1
LAN0_LED1	R381 10K 1% DNP	R382 10K 1% DNP	MODE 1
LAN0_LED0	R400 10K 1% DNP	R428 10K 1% DNP	MODE 1

PHY ADDRESS 0x00

AUTO NEGOTIATE

RGMII RX CLOCK SKEW = 2nS

RGMII TX CLOCK SKEW = 2nS, ADVERTISE 10/100/1000

MIRROR & SGMII DISABLE

1 LED 2 = ACTIVITY, LED_0 = LINK (HIGH TRUE)

RIGEL ENGINEERING
690 Cone Park Court
Merritt Island, FL 32952

Title: CU7011 : T2081 Ethernet 0 PHY and Magnetics

Size: B | Document Number: <Doc> | Rev: A

Date: Monday, May 04, 2020 | Sheet 26 of 36