1000 Base-T MODULES ISOLATION TRANSFORMERS WITH FILTERS

RoHS

- Designed for Gigabit Ethernet 1000 Base-T.
- Provides the Cable Interface, Isolation & Common Mode Filtering.
- Meet IEEE 802.3ab standard for 1000 Base-T.
- Comply with RoHS & Halogen Free Requirements.

ELECTRICAL SPECIFICATIONS AT 25°C - OPERATING TEMPERATURE RANGE 0°C TO +70°C

PART NUMBER	TURNS RATIO +/-5%	INDUCTANCE uH Min @100KHz 0.100Vrms 8mADC	INSERTION LOSS (dB Max) 1 to 100MHz	Return Loss (dB Min)					DCMR (dB Min)			Crosstalk (dB Min)			HI-POT (Vrms)
				1-30 MHz	40 MHz	50 MHz	60-80 MHz	100 MHz	30 MHz	50 MHz	100 MHz	30 MHz	60 MHz	100 MH	
PM-9201	1ct:1ct	350	-1.0	-18	-14.4	-13.1	-12	-10	-40	-35	-30	-45	-40	-35	1500
PM-9202	1ct:1ct	350	-1.0	-18	-14.4	-13.1	-12	-10	-43	-37	-33	-45	-40	-35	1500

ELECTRICAL SPECIFICATIONS AT 25°C - OPERATING TEMPERATURE RANGE -40°C TO +85°C

PART NUMBER	TURNS RATIO +/-5%	INDUCTANCE uH Min @100KHz 0.100Vrms 8mADC	INSERTION LOSS (dB Max) 1 to 100MHz	Return Loss (dB Min)					DCMR (dB Min)			Crosstalk (dB Min)			HI-POT (Vrms)
				1-30 MHz	40 MHz	50 MHz	60-80 MHz	100 MHz	30 MHz	50 MHz	100 MHz	30 MHz	60 MHz	100 MH	-
PM-9210	1ct:1ct	350	-1.0	-18	-14	-13	-12	-10	-40	-35	-30	-45	-40	-35	1500

PM-920X MECHANICAL

All Dimensions in mm
Tolerance +/-0.25

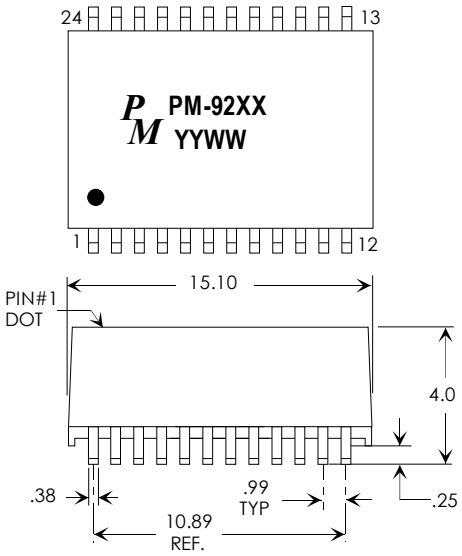

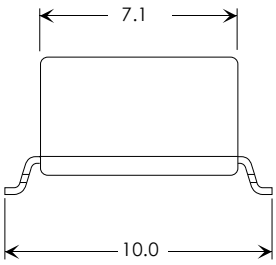

PCB LAYOUT

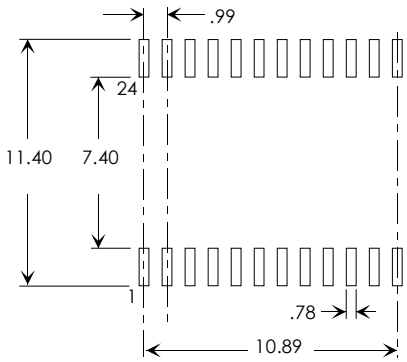

Specifications subject to change without notice. 06/19

20381 BARENTS SEA CIRCLE, LAKE FOREST, CA 92630 • TEL: (949) 452-0511 • FAX: (949) 452-0512 • http://www.premiermag.com

1000 Base-T MODULES ISOLATION TRANSFORMERS WITH FILTERS

RoHS

PM-9201 / 9210 SCHEMATIC

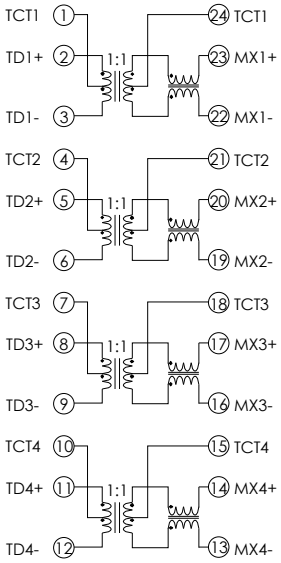
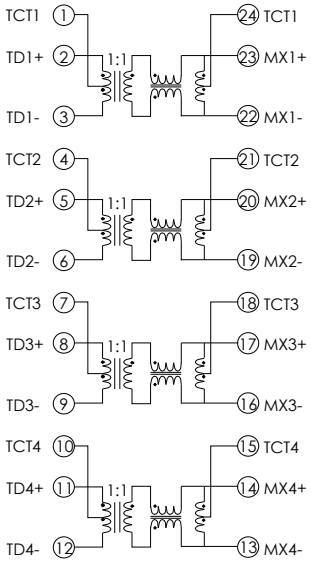
PM-9202 SCHEMATIC