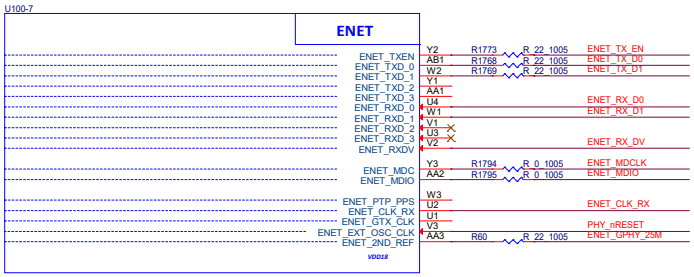
U100-7
ENET
ENET_TXEN
ENET_TXD_0
ENET_TXD_1
ENET_TXD_2
ENET_TXD_3
ENET_RXD_0
ENET_RXD_1
ENET_RXD_2
ENET_RXD_3
ENET_RXDV
ENET_MDC
ENET_MDIO
ENET_PTP_PPS
ENET_CLK_RX
ENET_GTX_CLK
ENET_EXT_OSC_CLK
ENET_2ND_REF
VDD18
Y2 R1773 R_22_1005 ENET_TX_EN
AB1 R1768 R_22_1005 ENET_TX_D0
W2 R1769 R_22_1005 ENET_TX_D1
Y1
AA1
U4 ENET_RX_D0
W1 ENET_RX_D1
V1
U3
V2 ENET_RX_DV
Y3 R1794 R_0_1005 ENET_MDCLK
AA2 R1795 R_0_1005 ENET_MDIO
W3
U2 ENET_CLK_RX
U1
V3 PHY_nRESET
AA3 R60 R_22_1005 ENET_GPHY_25M

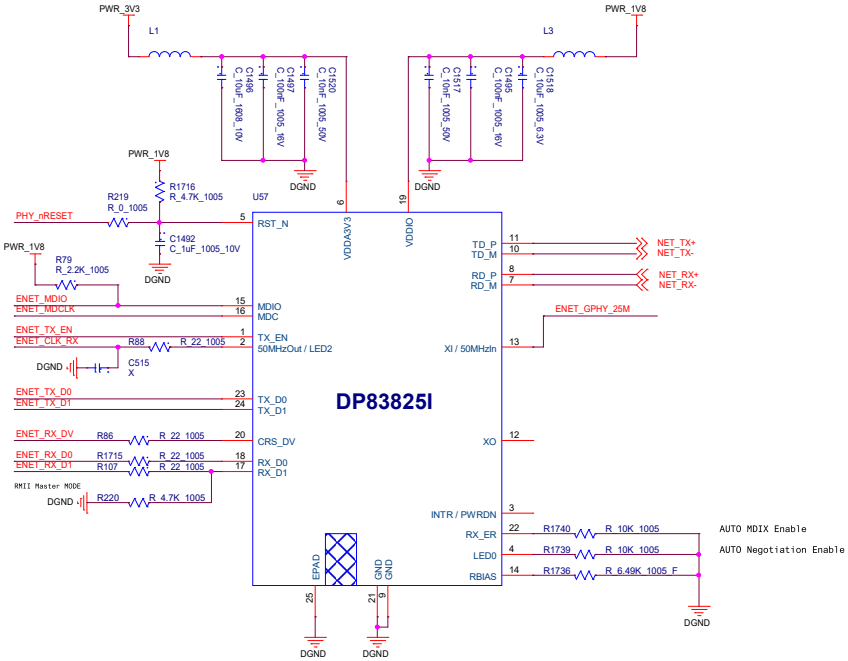
PWR_3V3
L1
C1496 C_10uF_1608_10V
C1497 C_100nF_1005_16V
C1520 C_10nF_1005_50V
PWR_1V8
L3
C1517 C_10nF_1005_50V
C1495 C_100nF_1005_16V
C1519 C_10uF_1005_6.3V
DGND
PWR_1V8
R1716 R_4.7K_1005
R219 R_0_1005
PHY_nRESET
C1492 C_1uF_1005_10V
PWR_1V8
R79 R_2.2K_1005
U57
DP83825I
RST_N
VDDA3V3
VDDIO
TD_P
TD_M
RD_P
RD_M
NET_TX+
NET_TX-
NET_RX+
NET_RX-
ENET_MDIO
ENET_MDCLK
MDIO
MDC
ENET_GPHY_25M
ENET_TX_EN
ENET_CLK_RX
TX_EN
50MHzOut / LED2
R88 R_22_1005
C515 X
XI / 50MHzIn
ENET_TX_D0
ENET_TX_D1
TX_D0
TX_D1
ENET_RX_DV
R86 R_22_1005
CRS_DV
XO
ENET_RX_D0
ENET_RX_D1
R1715 R_22_1005
R107 R_22_1005
RX_D0
RX_D1
RMII Master MODE
R220 R_4.7K_1005
INTR / PWRDN
RX_ER
LED0
RBIAS
R1740 R_10K_1005
R1739 R_10K_1005
R1736 R_6.49K_1005_F
AUTO MDIX Enable
AUTO Negotiation Enable
EPAD
GND
GND