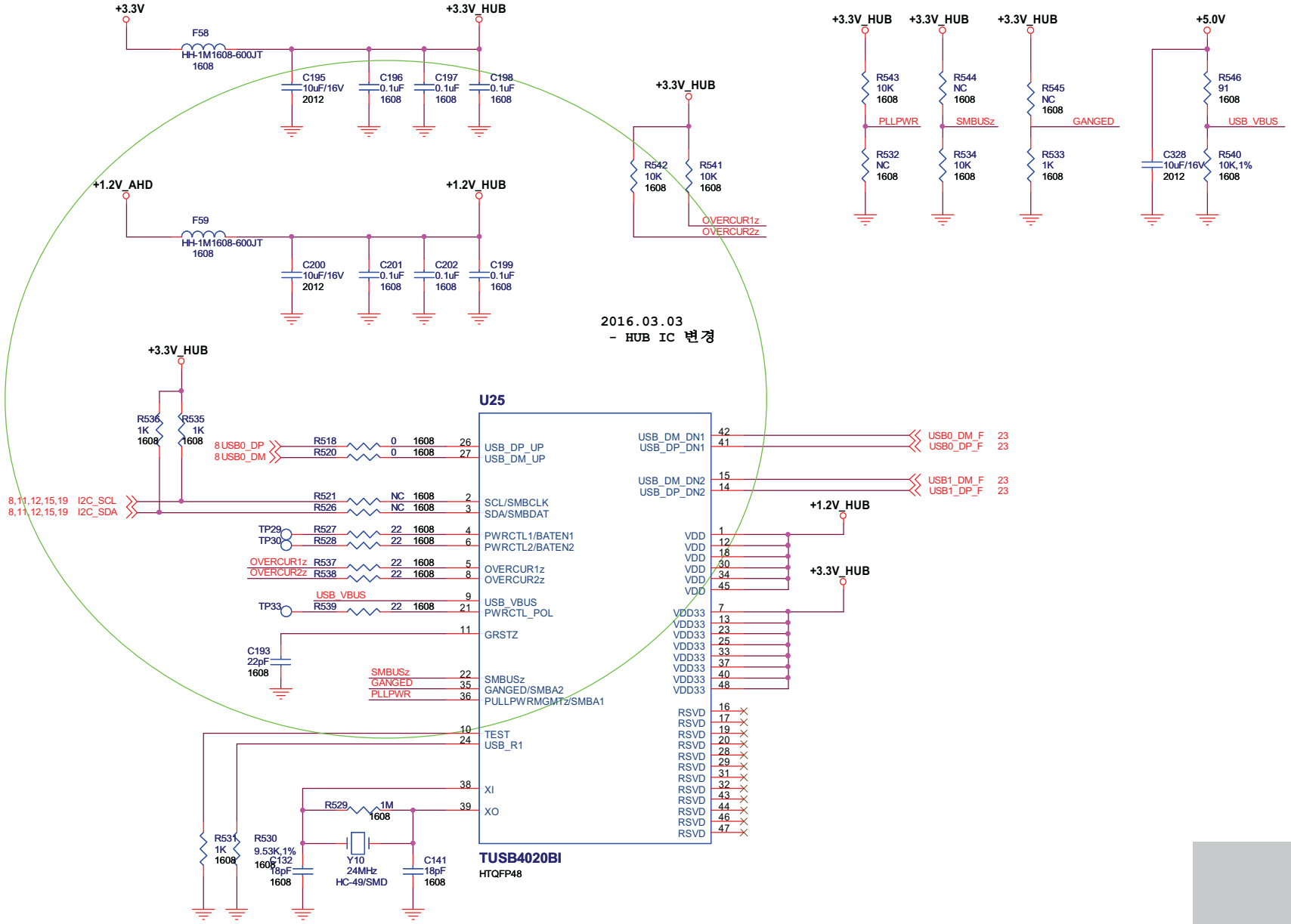PRELIMINARY