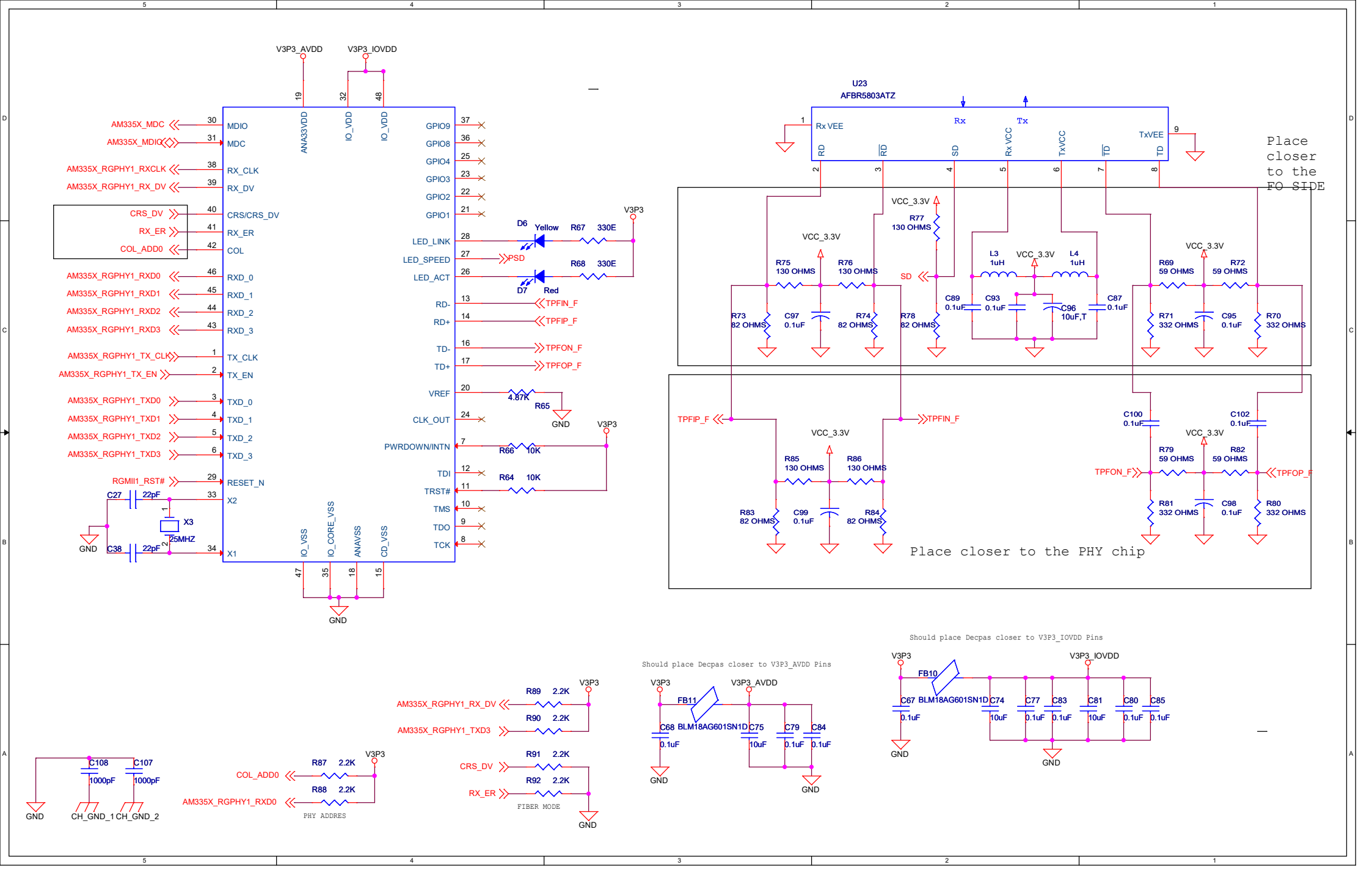
V3P3_AVDD
V3P3_IOVDD
AM335X_MDC
AM335X_MDIO
AM335X_RGPHY1_RXCLK
AM335X_RGPHY1_RX_DV
CRS_DV
RX_ER
COL_ADD0
AM335X_RGPHY1_RXD0
AM335X_RGPHY1_RXD1
AM335X_RGPHY1_RXD2
AM335X_RGPHY1_RXD3
AM335X_RGPHY1_TX_CLK
AM335X_RGPHY1_TX_EN
AM335X_RGPHY1_TXD0
AM335X_RGPHY1_TXD1
AM335X_RGPHY1_TXD2
AM335X_RGPHY1_TXD3
RGMII1_RST#
MDIO
MDC
RX_CLK
RX_DV
CRS/CRS_DV
RX_ER
COL
RXD_0
RXD_1
RXD_2
RXD_3
TX_CLK
TX_EN
TXD_0
TXD_1
TXD_2
TXD_3
RESET_N
X2
X1
ANA33VDD
IO_VDD
IO_VSS
IO_CORE_VSS
ANAVSS
CD_VSS
GPIO9
GPIO8
GPIO4
GPIO3
GPIO2
GPIO1
LED_LINK
LED_SPEED
LED_ACT
RD-
RD+
TD-
TD+
VREF
CLK_OUT
PWRDOWN/INTN
TDI
TRST#
TMS
TDO
TCK
D6
Yellow
R67 330E
PSD
R68 330E
D7
Red
TPFIN_F
TPFIP_F
TPFON_F
TPFOP_F
4.87K
R65
R66 10K
R64 10K
C27 22pF
C38 22pF
X3
25MHZ
GND
U23
AFBR5803ATZ
Rx VEE
Rx
Tx
TxVEE
RD
RD
SD
Rx VCC
TxVCC
TD
TD
Place closer to the FO SIDE
VCC_3.3V
R77 130 OHMS
R75 130 OHMS
R76 130 OHMS
L3 1uH
L4 1uH
R69 59 OHMS
R72 59 OHMS
R73 82 OHMS
C97 0.1uF
R74 82 OHMS
R78 82 OHMS
C89 0.1uF
C93 0.1uF
C96 10uF,T
C87 0.1uF
R71 332 OHMS
C95 0.1uF
R70 332 OHMS
C100 0.1uF
C102 0.1uF
R85 130 OHMS
R86 130 OHMS
R79 59 OHMS
R82 59 OHMS
R83 82 OHMS
C99 0.1uF
R84 82 OHMS
R81 332 OHMS
C98 0.1uF
R80 332 OHMS
Place closer to the PHY chip
Should place Decpas closer to V3P3_AVDD Pins
Should place Decpas closer to V3P3_IOVDD Pins
FB11
BLM18AG601SN1D
C68 0.1uF
C75 10uF
C79 0.1uF
C84 0.1uF
FB10
C67 0.1uF
C74 10uF
C77 0.1uF
C83 0.1uF
C81 10uF
C80 0.1uF
C85 0.1uF
R89 2.2K
R90 2.2K
R91 2.2K
R92 2.2K
R87 2.2K
R88 2.2K
PHY ADDRES
FIBER MODE
C108 1000pF
C107 1000pF
CH_GND_1
CH_GND_2