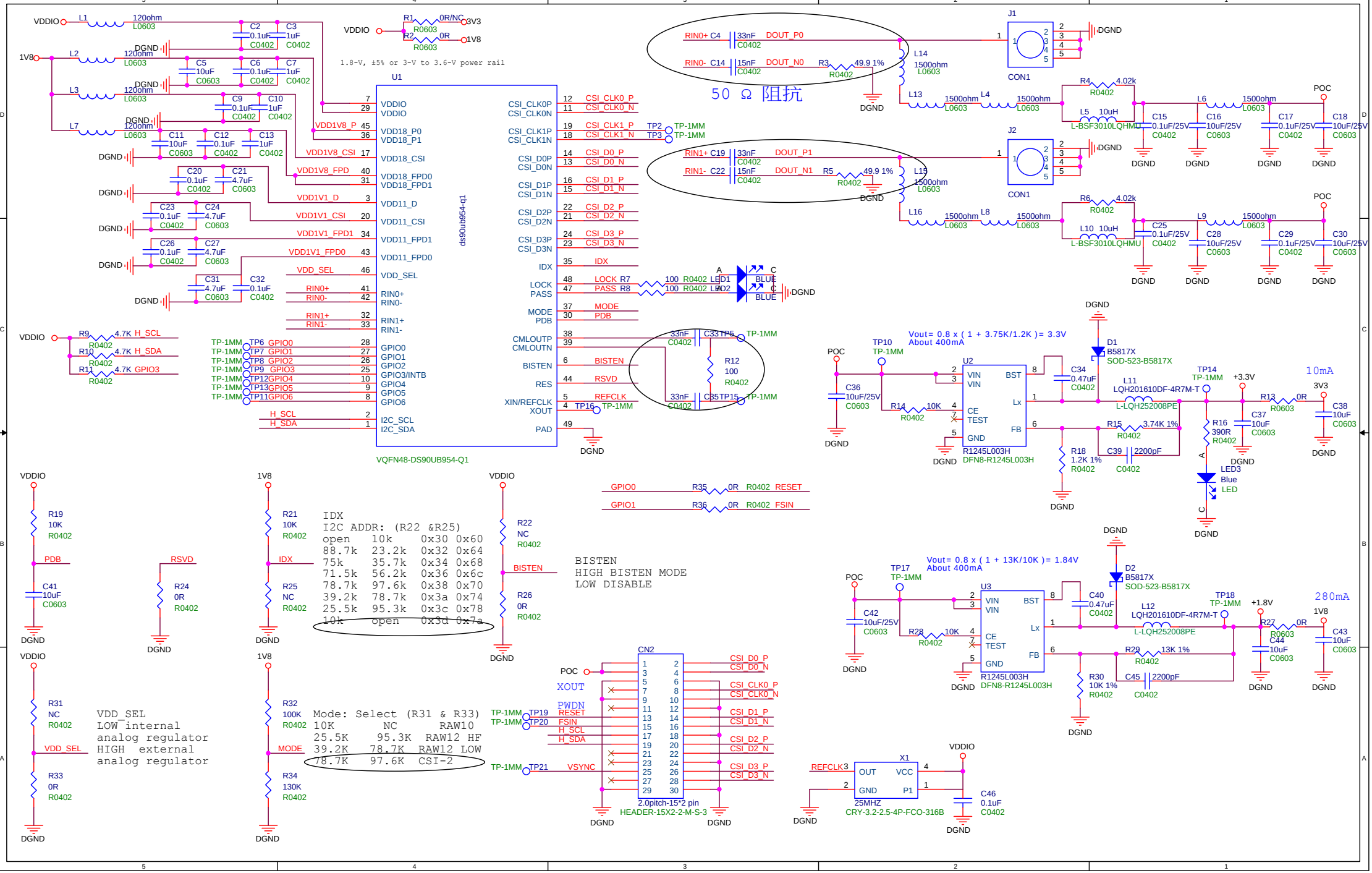
U1
ds90ub954-q1
VQFN48-DS90UB954-Q1
1.8-V, ±5% or 3-V to 3.6-V power rail
50 Ω 阻抗
J1
CON1
J2
CON1
Vout= 0.8 x (1 + 3.75K/1.2K)= 3.3V
About 400mA
10mA
U2
R1245L003H
DFN8-R1245L003H
Vout= 0.8 x (1 + 13K/10K)= 1.84V
About 400mA
280mA
U3
R1245L003H
DFN8-R1245L003H
IDX
I2C ADDR: (R22 &R25)
open 10k 0x30 0x60
88.7k 23.2k 0x32 0x64
75k 35.7k 0x34 0x68
71.5k 56.2k 0x36 0x6c
78.7k 97.6k 0x38 0x70
39.2k 78.7k 0x3a 0x74
25.5k 95.3k 0x3c 0x78
10k open 0x3d 0x7a
BISTEN
HIGH BISTEN MODE
LOW DISABLE
VDD_SEL
LOW internal
analog regulator
HIGH external
analog regulator
Mode: Select (R31 & R33)
10K NC RAW10
25.5K 95.3K RAW12 HF
39.2K 78.7K RAW12 LOW
78.7K 97.6K CSI-2
CN2
2.0pitch-15*2 pin
HEADER-15X2-2-M-S-3
X1
25MHZ
CRY-3.2-2.5-4P-FCO-316B