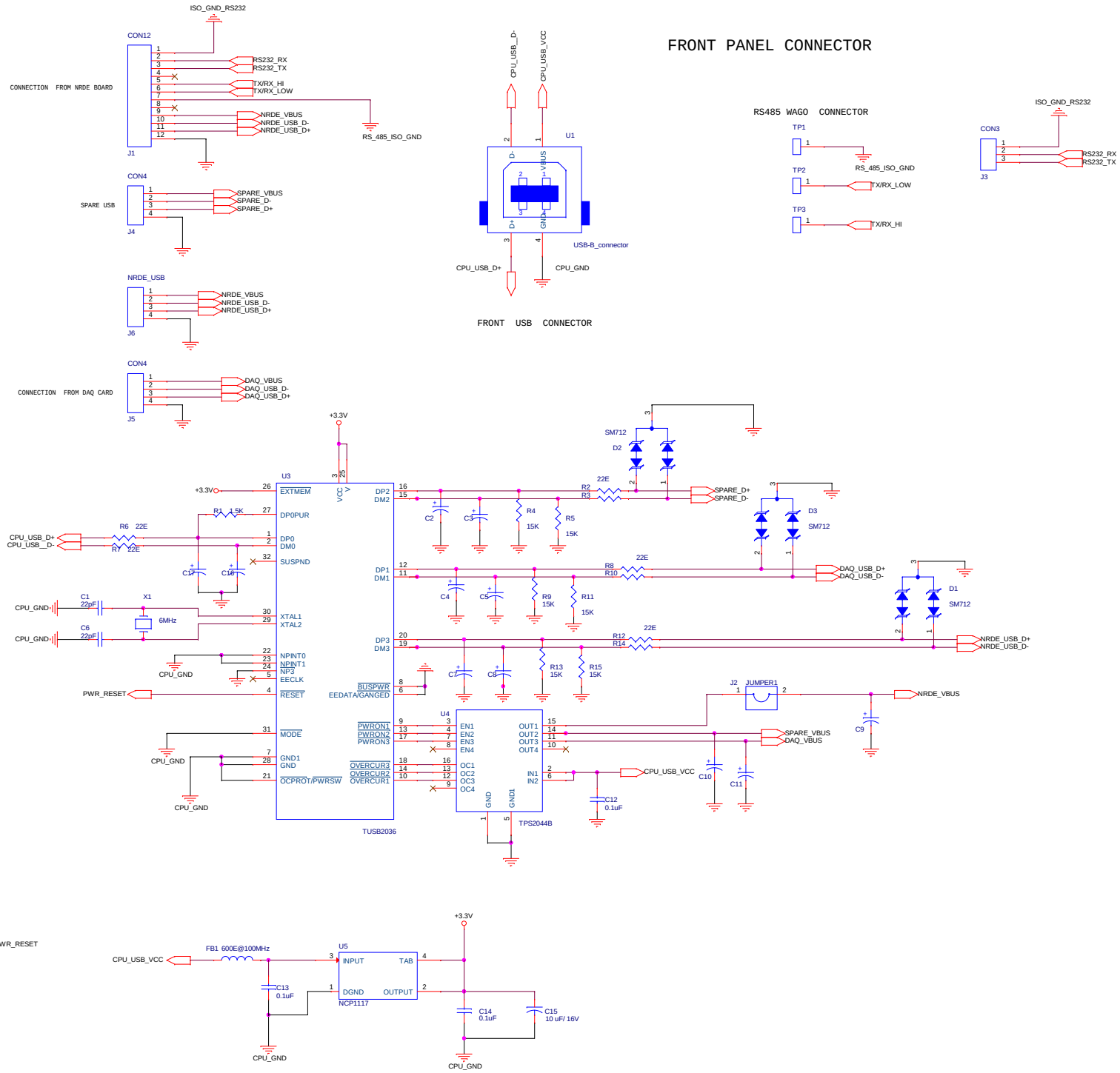
FRONT PANEL CONNECTOR
CONNECTION FROM NRDE BOARD
CON12
J1
ISO_GND_RS232
RS232_RX
RS232_TX
TX/RX_HI
TX/RX_LOW
NRDE_VBUS
NRDE_USB_D-
NRDE_USB_D+
RS_485_ISO_GND
SPARE USB
CON4
J4
SPARE_VBUS
SPARE_D-
SPARE_D+
NRDE_USB
J6
CONNECTION FROM DAQ CARD
J5
DAQ_VBUS
DAQ_USB_D-
DAQ_USB_D+
CPU_USB_D-
CPU_USB_VCC
U1
USB-B_connector
CPU_USB_D+
CPU_GND
FRONT USB CONNECTOR
RS485 WAGO CONNECTOR
TP1
TP2
TP3
CON3
J3
U3
TUSB2036
EXTMEM
DP0PUR
DP0
DM0
SUSPND
XTAL1
XTAL2
NPINT0
NPINT1
NP3
EECLK
RESET
MODE
GND1
GND
OCPROT/PWRSW
DP2
DM2
DP1
DM1
DP3
DM3
BUSPWR
EEDATA/GANGED
PWRON1
PWRON2
PWRON3
OVERCUR3
OVERCUR2
OVERCUR1
+3.3V
PWR_RESET
CPU_GND
X1
6MHz
C1 22pF
C6 22pF
R1 1.5K
R6 22E
R7 22E
R2 22E
R3 22E
R8 22E
R10 22E
R12 22E
R14 22E
R4 15K
R5 15K
R9 15K
R11 15K
R13 15K
R15 15K
SM712
D2
D3
D1
SPARE_D+
SPARE_D-
DAQ_USB_D+
DAQ_USB_D-
NRDE_USB_D+
NRDE_USB_D-
U4
TPS2044B
EN1
EN2
EN3
EN4
OUT1
OUT2
OUT3
OUT4
OC1
OC2
OC3
OC4
IN1
IN2
J2 JUMPER1
NRDE_VBUS
SPARE_VBUS
DAQ_VBUS
CPU_USB_VCC
C9
C10
C11
C12 0.1uF
R16 10K
D5 1N4148
R17 47K
C18 0.1uF/16V
FB1 600E@100MHz
U5
NCP1117
INPUT
TAB
DGND
OUTPUT
C13 0.1uF
C14 0.1uF
C15 10 uF/ 16V