SONY SENSOR

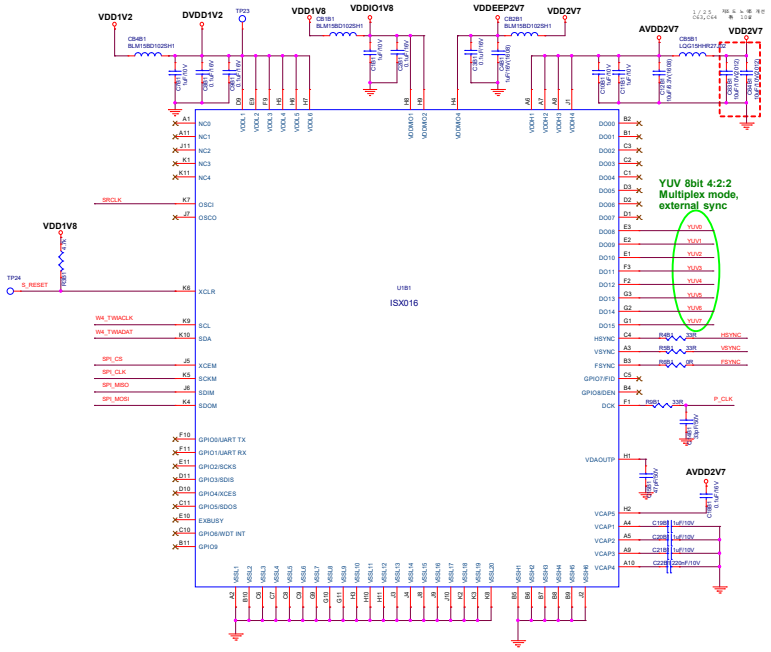

SERIALIZER BLOCK

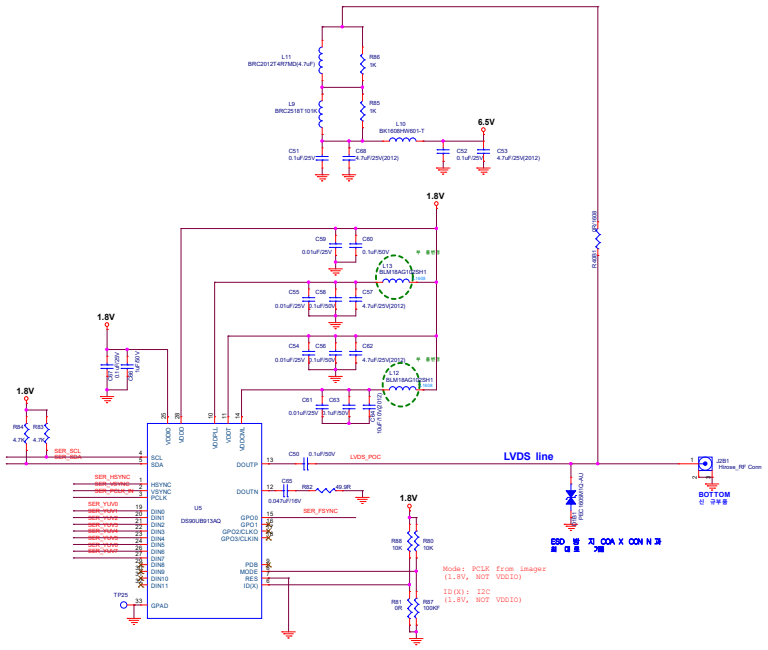

Title	<Title>		
Size A1	Document Number <Doc>		Rev <Rev Code>
Date: Friday, April 12, 2019		Sheet 1 of 1	