CTL1	CTL0	FLIP	Mux Operation
LOW	LOW	LOW	POWER DOWN
LOW	LOW	HIGH	POWER DOWN
LOW	HIGH	LOW	One Port USB3.1 No FLIP
LOW	HIGH	HIGH	One Port USB3.1 With FLIP
HIGH	LOW	LOW	4 Lane DP No FLIP
HIGH	LOW	HIGH	4 Lane DP With FLIP
HIGH	HIGH	LOW	1 Port USB3.1 + 2 Lane DP No FLIP
HIGH	HIGH	HIGH	1 Port USB3.1 + 2 Lane DP With FLIP

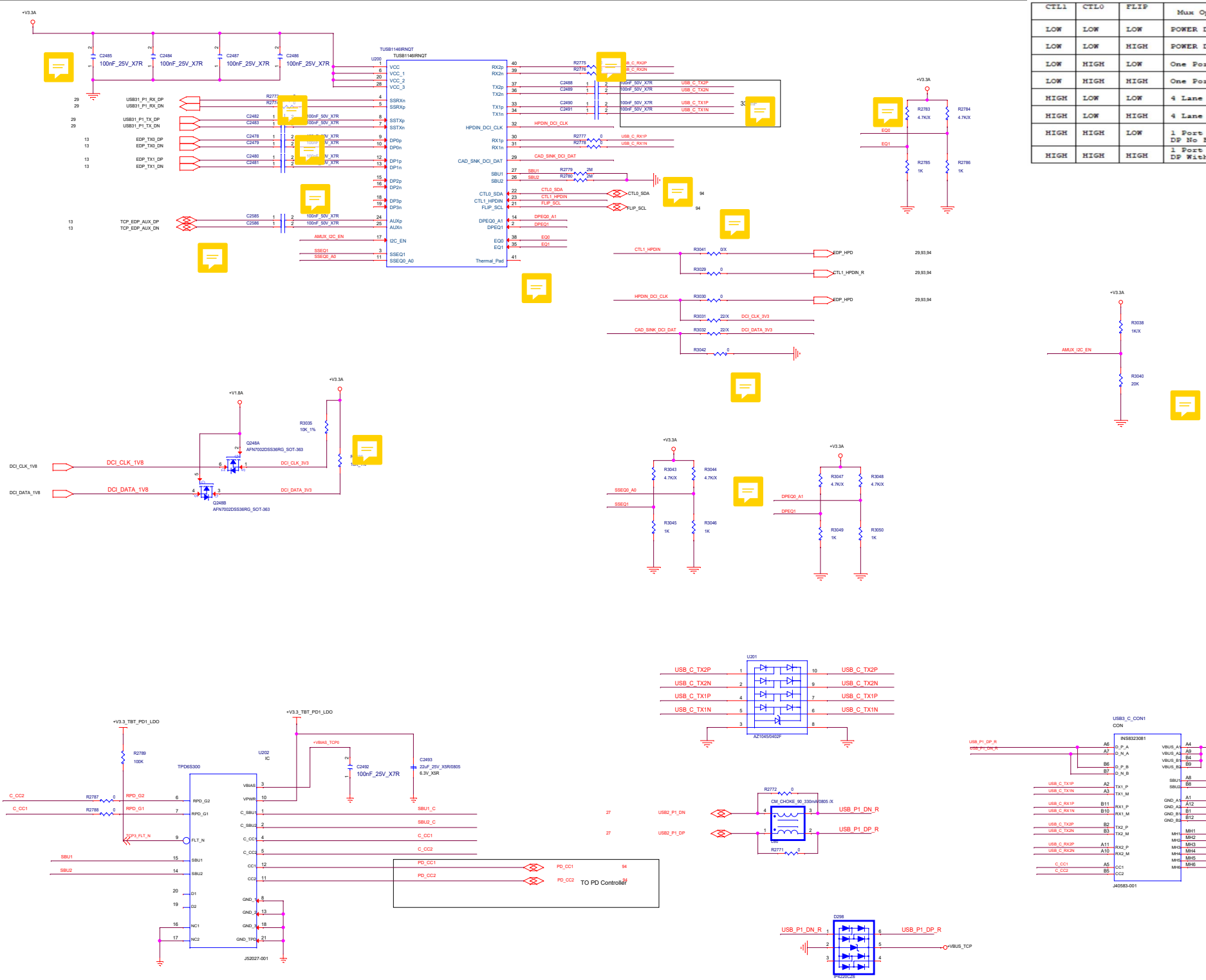

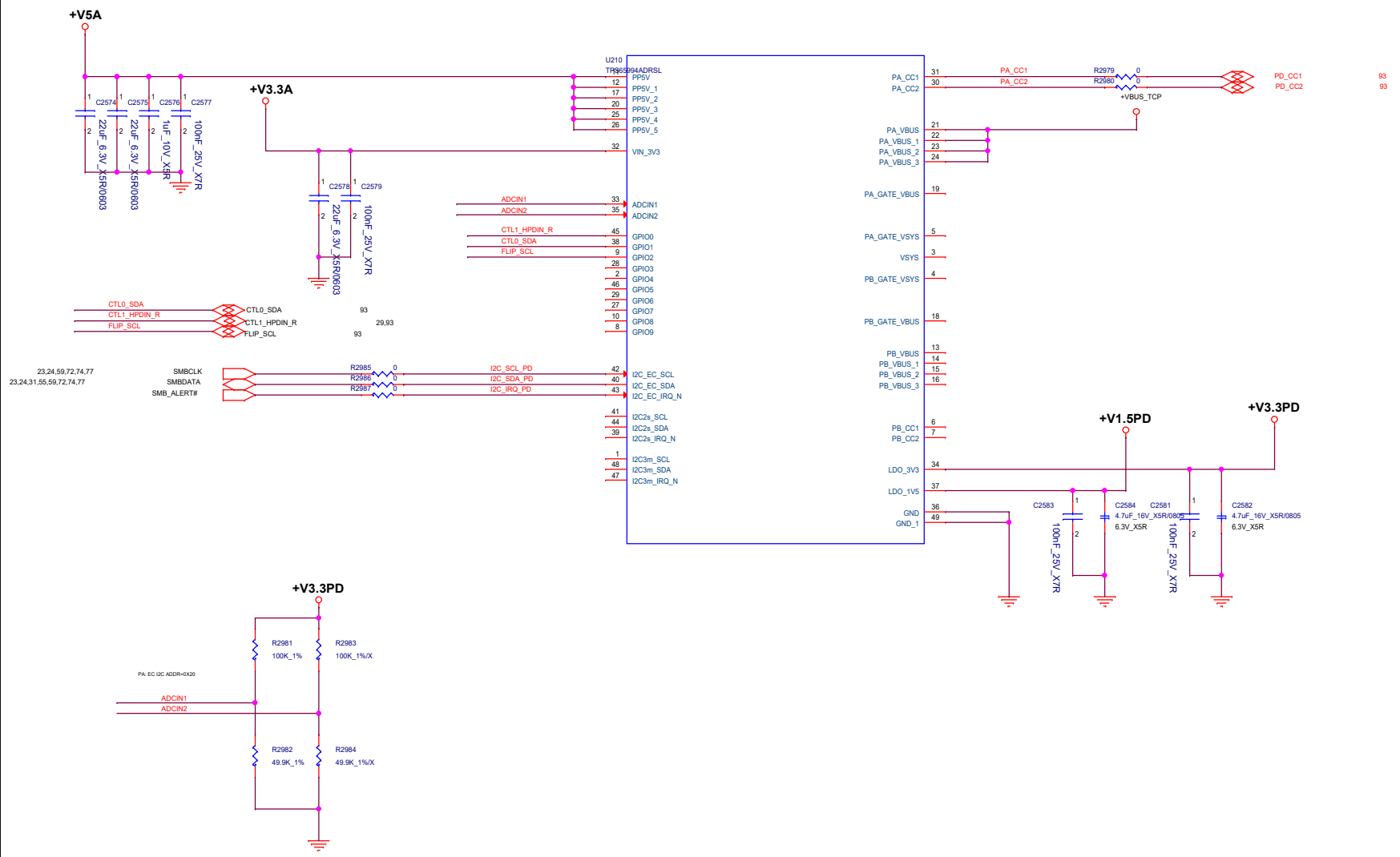
+V5A
+V3.3A
U210
TPS65994ADRSL
C2574 22uF_6.3V_X5R/0603
C2575 22uF_6.3V_X5R/0603
C2576 1uF_10V_X5R
C2577 100nF_25V_X7R
C2578 22uF_6.3V_X5R/0603
C2579 100nF_25V_X7R
PP5V
PP5V_1
PP5V_2
PP5V_3
PP5V_4
PP5V_5
VIN_3V3
ADCIN1
ADCIN2
CTL1_HPDIN_R
CTL0_SDA
FLIP_SCL
GPIO0
GPIO1
GPIO2
GPIO3
GPIO4
GPIO5
GPIO6
GPIO7
GPIO8
GPIO9
I2C_EC_SCL
I2C_EC_SDA
I2C_EC_IRQ_N
I2C2s_SCL
I2C2s_SDA
I2C2s_IRQ_N
I2C3m_SCL
I2C3m_SDA
I2C3m_IRQ_N
PA_CC1
PA_CC2
PA_VBUS
PA_VBUS_1
PA_VBUS_2
PA_VBUS_3
PA_GATE_VBUS
PA_GATE_VSYS
VSYS
PB_GATE_VSYS
PB_GATE_VBUS
PB_VBUS
PB_VBUS_1
PB_VBUS_2
PB_VBUS_3
PB_CC1
PB_CC2
LDO_3V3
LDO_1V5
GND
GND_1
R2979 0
R2980 0
+VBUS_TCP
PD_CC1 93
PD_CC2 93
CTL0_SDA 93
CTL1_HPDIN_R 29,93
FLIP_SCL 93
23,24,59,72,74,77
23,24,31,55,59,72,74,77
SMBCLK
SMBDATA
SMB_ALERT#
R2985 0
R2986 0
R2987 0
I2C_SCL_PD
I2C_SDA_PD
I2C_IRQ_PD
+V1.5PD
+V3.3PD
C2583 100nF_25V_X7R
C2584 4.7uF_16V_X5R/0805 6.3V_X5R
C2581 100nF_25V_X7R
C2582 4.7uF_16V_X5R/0805 6.3V_X5R
+V3.3PD
R2981 100K_1%
R2983 100K_1%/X
PA: EC I2C ADDR=0X20
ADCIN1
ADCIN2
R2982 49.9K_1%
R2984 49.9K_1%/X