TUSB8041IRGCR

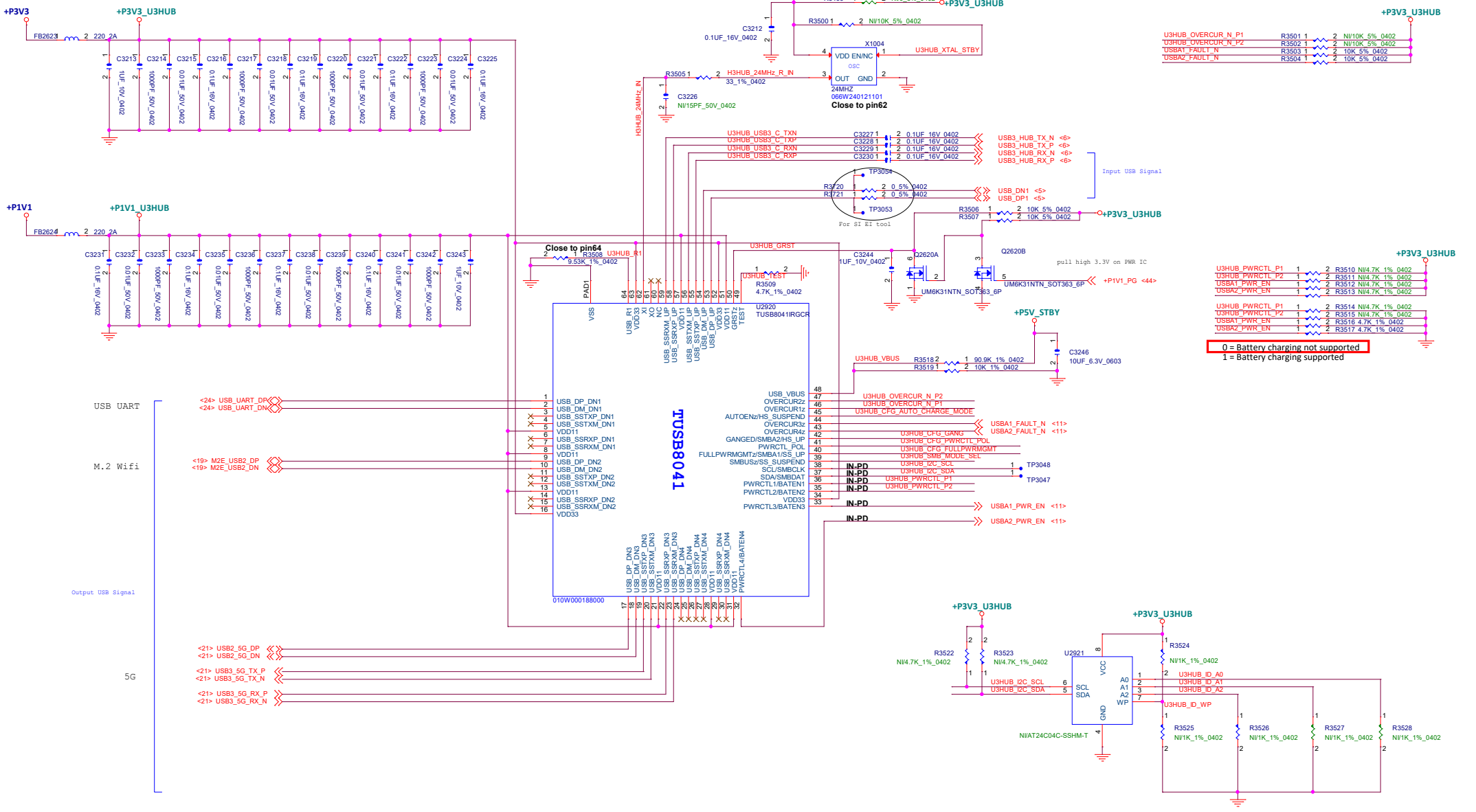

<Variant Name>

Lanner Confidential

Title	USB3 HUB/TUSB8041I		
Size Custom	Document Number IEE-CAI134		Rev 0.1
Date: Tuesday, July 08, 2025	Sheet 10 of 46		