LEVEL	SETTING
L0	1 kΩ to GND
L1	13 kΩ to GND
L2	F (Float)
L3	59 kΩ to GND

PIN NAME	DESCRIPTION
EN_SMB	Four-level control input used to select SMBus/I2C or Pin control. L0: Pin mode L1: RESERVED L2: RESERVED L3: I2C or SMBus Slave Mode
EQ0_ADDR0 EQ0_ADDR1	The 4-Level Control Input pins of SN75LVPE4410 is defined according to Table 4. In I2C or SMBus Mode (EN_SMB =L3), the pins are used to set the I2C or SMBus address of the device. The pin state is read on power up and decoded according to Table 5. In Pin mode (EN_SMB = L0), the pins are decoded at power up to control the CTLE boost setting according to Table 1.
GAIN	Sets DC gain of CTLE at power up. L0: Reserved L1: Reserved L2: 0 dB (recommended) L3: 3.5 dB
RX_DET	The RX_DET pin controls the receiver detect function. Depending on the input level, a 50 Ω or >50 kΩ termination to the power rail is enabled. See Table 3 for details.
VOD	Sets TX VOD setting at power up. L0: –6 dB L1: –3.5 dB L2: 0 dB (recommended) L3: –1.5 dB

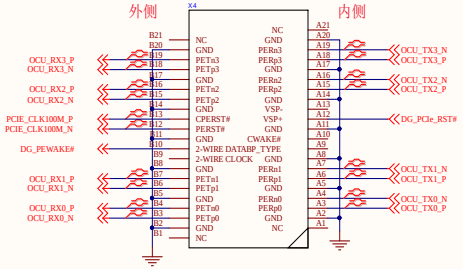

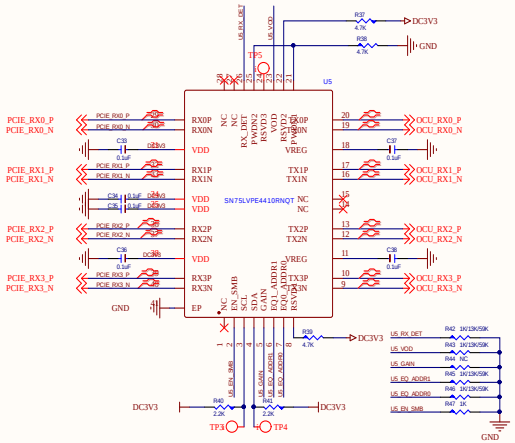

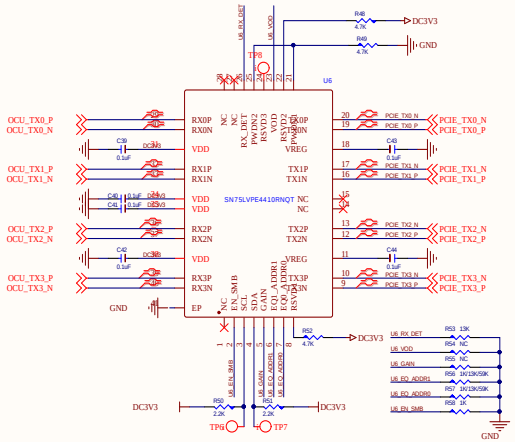

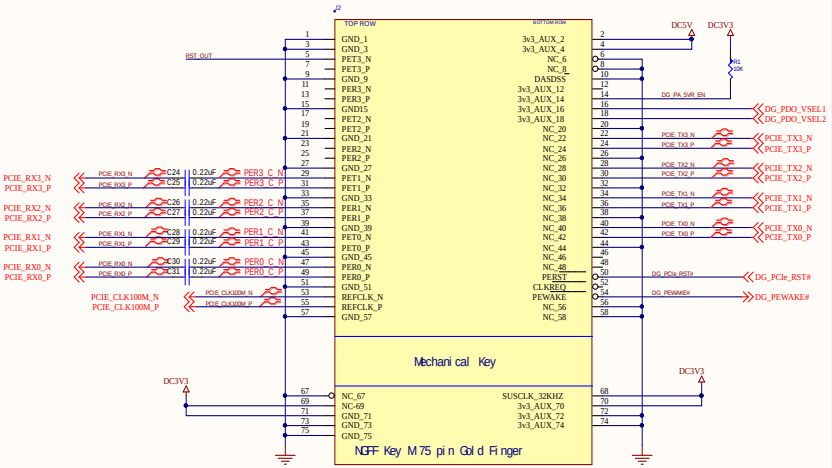

Title		
Size	Number	Revision
A2		
Date: 2024/5/10	Sheet of	
File: G:\PCIE_MXM\..\OCU_TYPEC.SchDoc	Drawn By:	