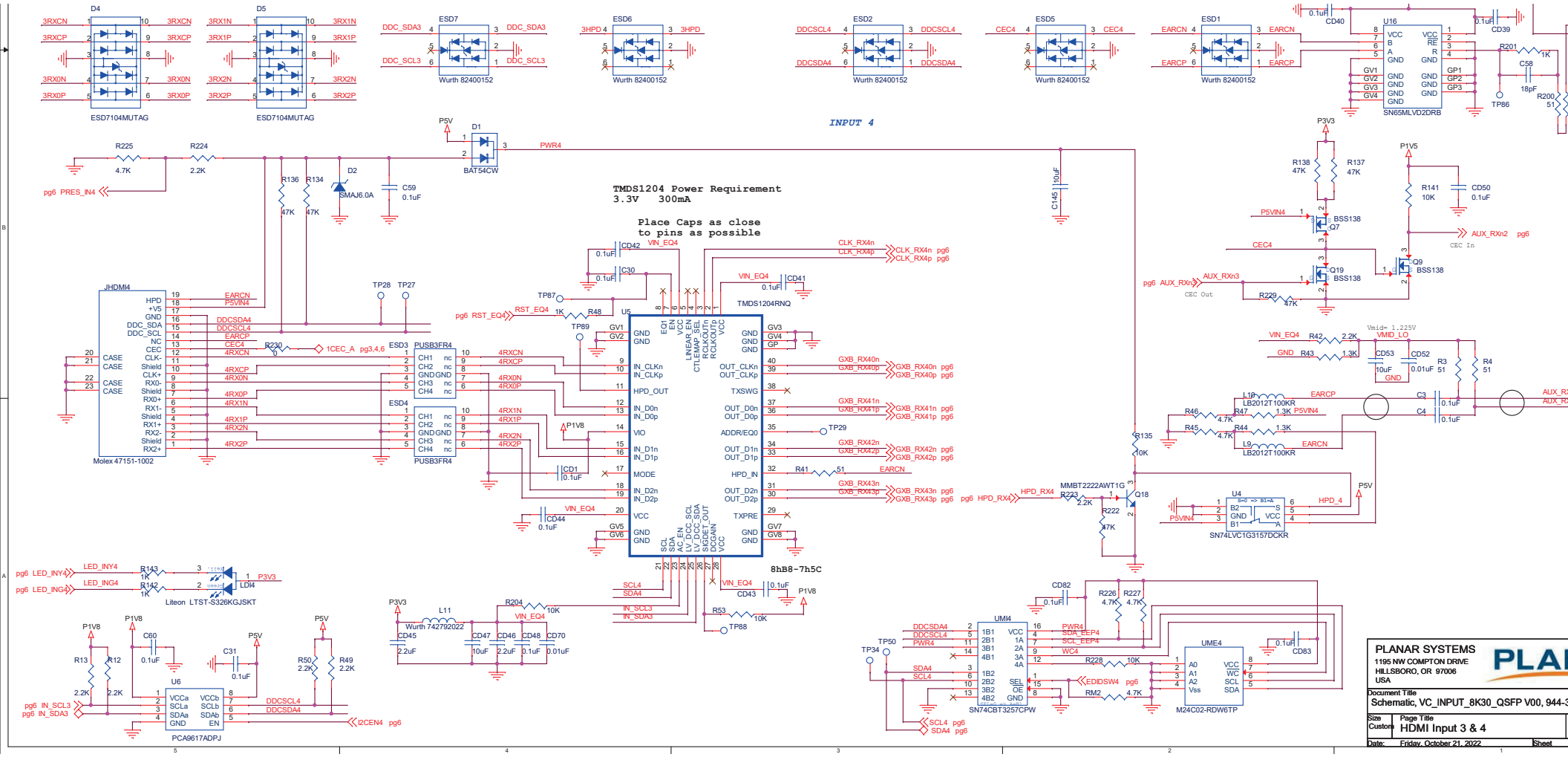
INPUT 4
TMDS1204 Power Requirement
3.3V 300mA
Place Caps as close
to pins as possible
TMDS1204RNQ
8hB8-7h5C
JHDMI4
Molex 47151-1002
ESD7104MUTAG
Wurth 82400152
SN65MLVD2DRB
SN74LVC1G3157DCKR
SN74CBT3257CPW
M24C02-RDW6TP
PCA9617ADPJ
Liteon LTST-S326KGJSKT
Wurth 742792022
BAT54CW
SMAJ6.0A
PUSB3FR4
PLANAR SYSTEMS
1195 NW COMPTON DRIVE
HILLSBORO, OR 97006
USA
Document Title
Schematic, VC_INPUT_8K30_QSFP V00, 944-3
Page Title
HDMI Input 3 & 4
Size
Custom
Date:
Friday, October 21, 2022
Sheet