		MATERIAL	COLOR/FINISH
A			

MIPI 4-Data Lane Switch
(For FPD-Link3,NTSC/PAL Decoder)

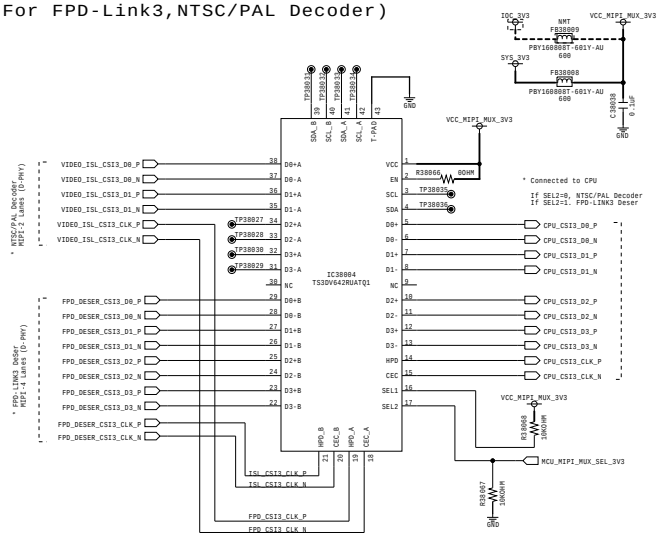

EN	SEL1	SEL2	Function
LOW	X	X	Disabled (Hi-Z)
HIGH	LOW	LOW	D0 (+A/-A), All the others are Hi-Z
HIGH	LOW	HIGH	D0 (+B/-B), All the others are Hi-Z
HIGH	HIGH	LOW	All A Channels are enable, All B are Hi-Z
HIGH	HIGH	HIGH	All B Channels are enable, All A are Hi-Z

DIMENSIONAL TOLERANCE	
ANGULAR	0
UNLESS OTHERWISE SPECIFIED	

CHANGES

C	B	A	QUANTITY	NO	PART NO	DESCRIPTION	MATERIAL	COLOR FINISH	NOTE

THIRD ANGLE PRO

SCALE	UNIT	DRAWN
	mm	CHECKED
		APPROVED

LG Electronics Inc.

ISSUE