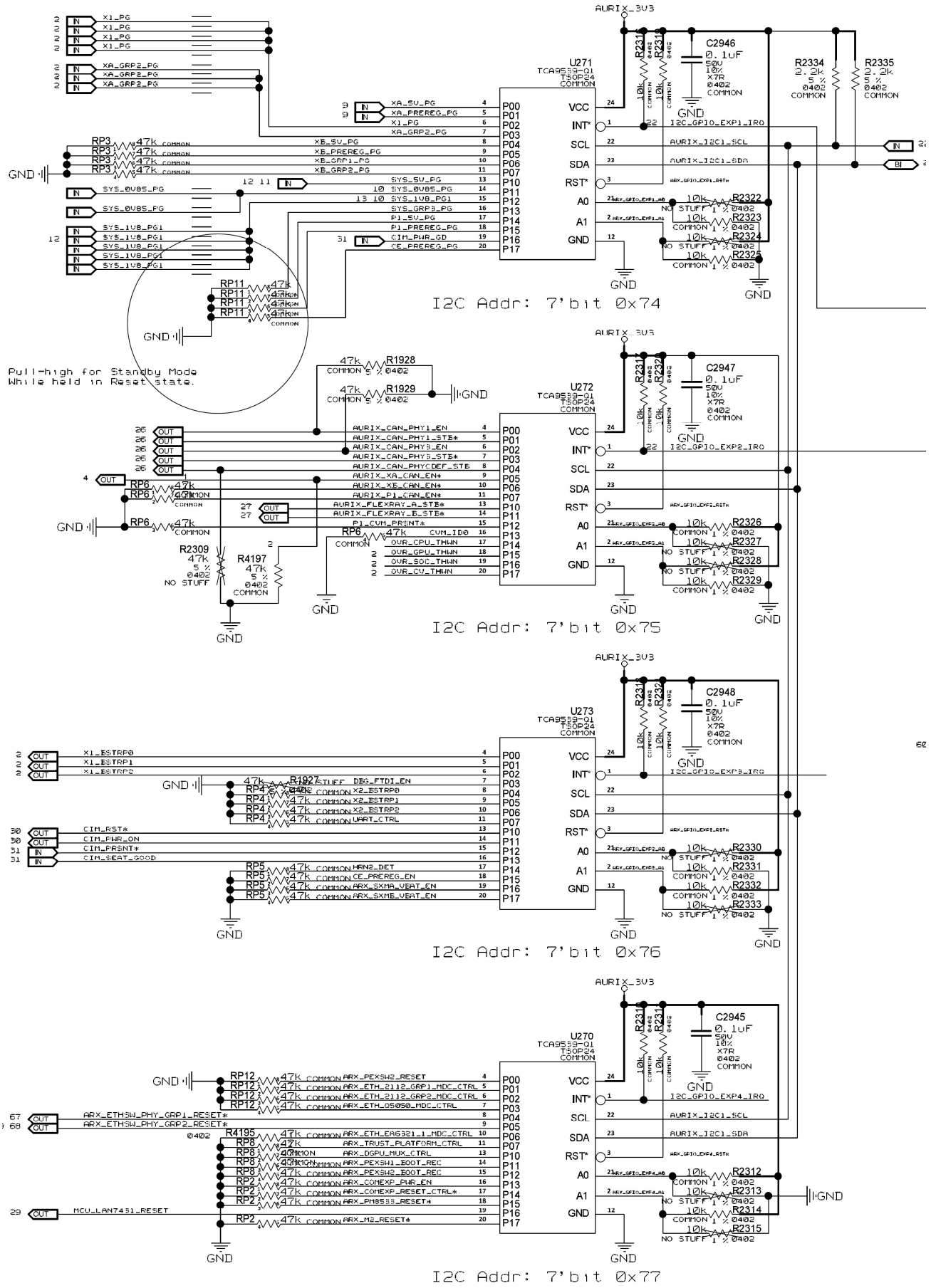
AURIX_3V3
U271
TCA9539-Q1
TSOP24
COMMON
C2946
0.1uF
50V
10%
X7R
0402
COMMON
R2334
2.2k
5%
0402
COMMON
R2335
2.2k
5%
0402
COMMON
VCC
INT*
SCL
SDA
RST*
A0
A1
GND
I2C_GPIO_EXP1_IRQ
AURIX_I2C1_SCL
AURIX_I2C1_SDA
I2C Addr: 7'bit 0x74
Pull-high for Standby Mode
While held in Reset state.
U272
C2947
I2C_GPIO_EXP2_IRQ
I2C Addr: 7'bit 0x75
U273
C2948
I2C_GPIO_EXP3_IRQ
I2C Addr: 7'bit 0x76
U270
C2945
I2C_GPIO_EXP4_IRQ
I2C Addr: 7'bit 0x77