I2C MUX FOR QC I2C BUS

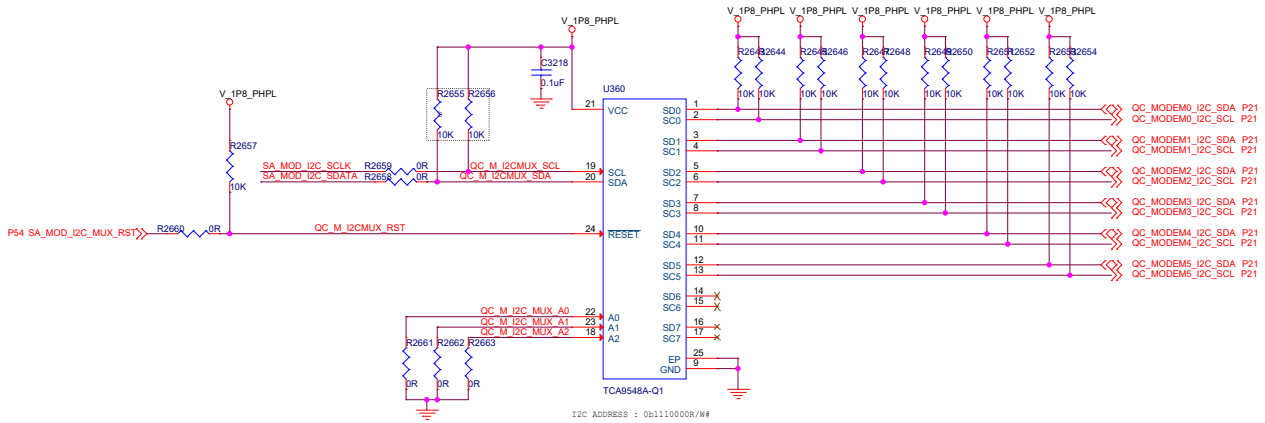

NOTE :
PART NUMBER : TCA9548ARGERQ1
V_1P8_PHPL : 1.8V
V_3P3_PMIC : 3.3V
V_3P3_PHPL : 3.3V

I2C SWITCH B/W SAFETY MCU AND OTHER

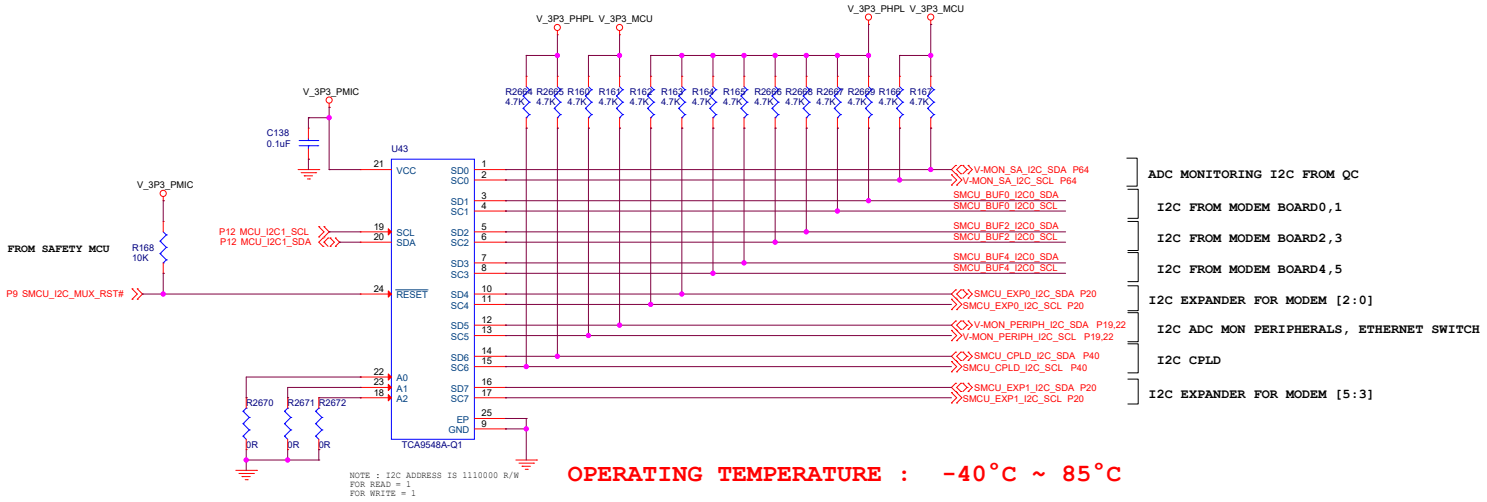

OPERATING TEMPERATURE : -40°C ~ 85°C

Title	I2C SWITCH	
Size C	Document Number <Doc>	Rev 0.1
Date: Monday, December 28, 2020	Sheet 8 of 19	