CAN0_EN, CAN0_STB, CAN0_ERR connect with MCU

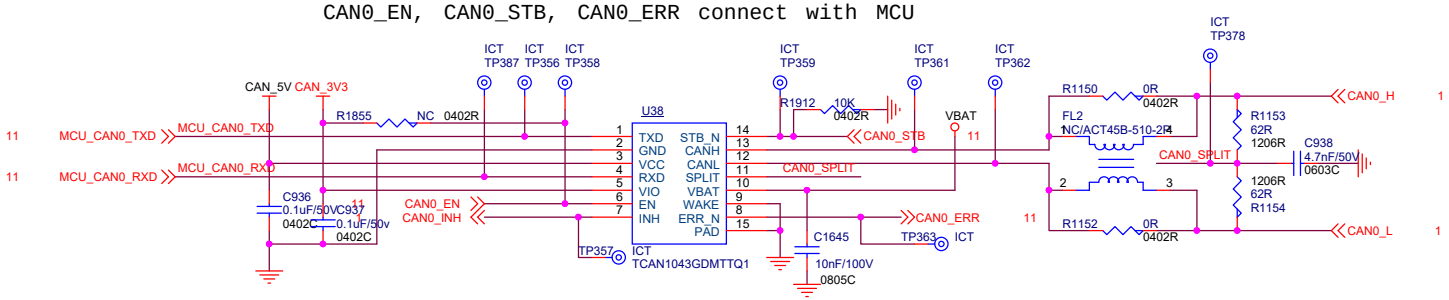

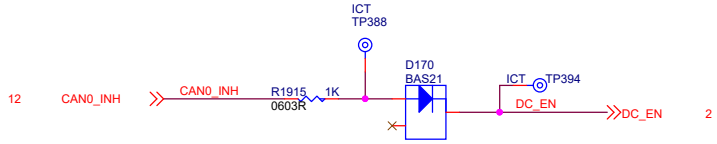

DC_EN to Enable the DC-DC IC 【MR14050SSQDDAQ1 】powe r fo r al l th e boar d

Title	NXP_S32V234 SVM & S32K APA	
Size A3	Document Number RS232 & CAN	Rev V4.0
Date: Friday, June 14, 2019	Sheet 12 of 13	