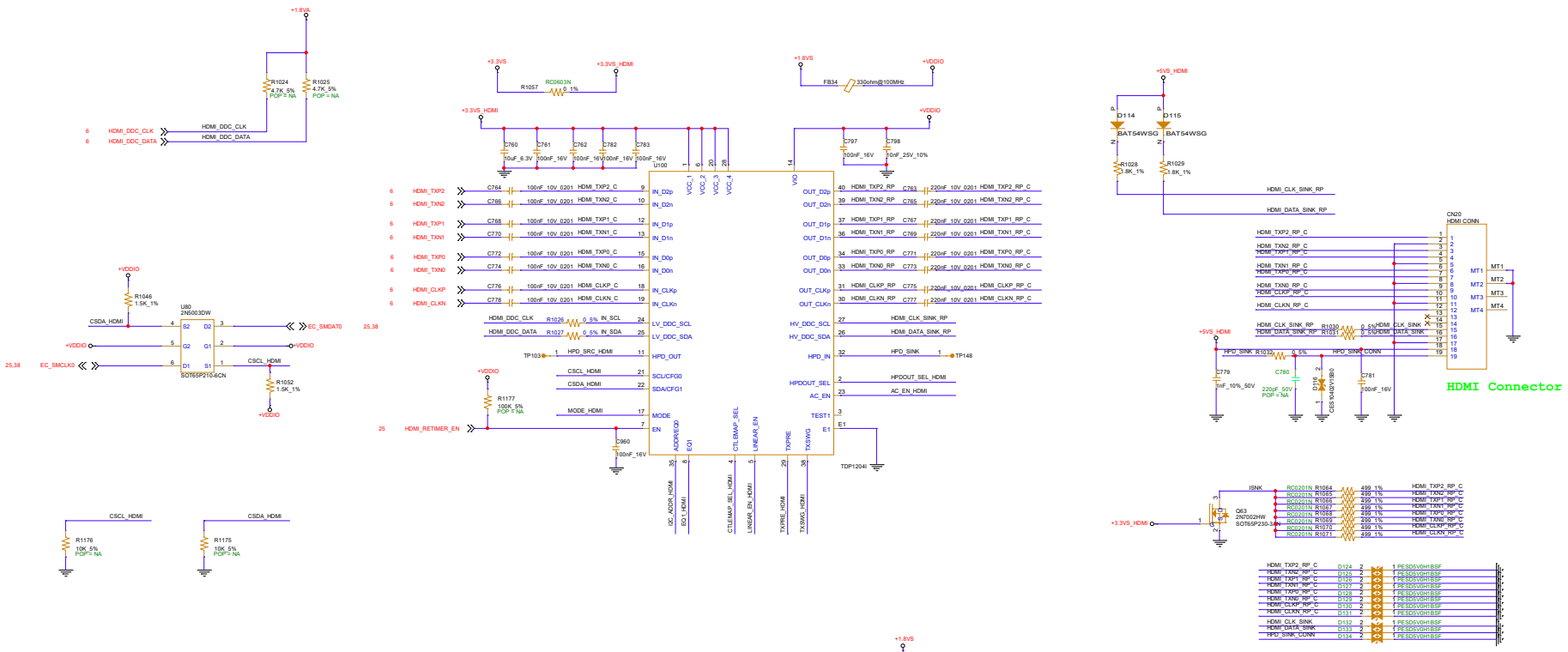

Mobile Name	PTL-H
Page Name	HDMI
Rev	V1.0
Date: Tuesday, July 22, 2025	Sheet 26 of 58