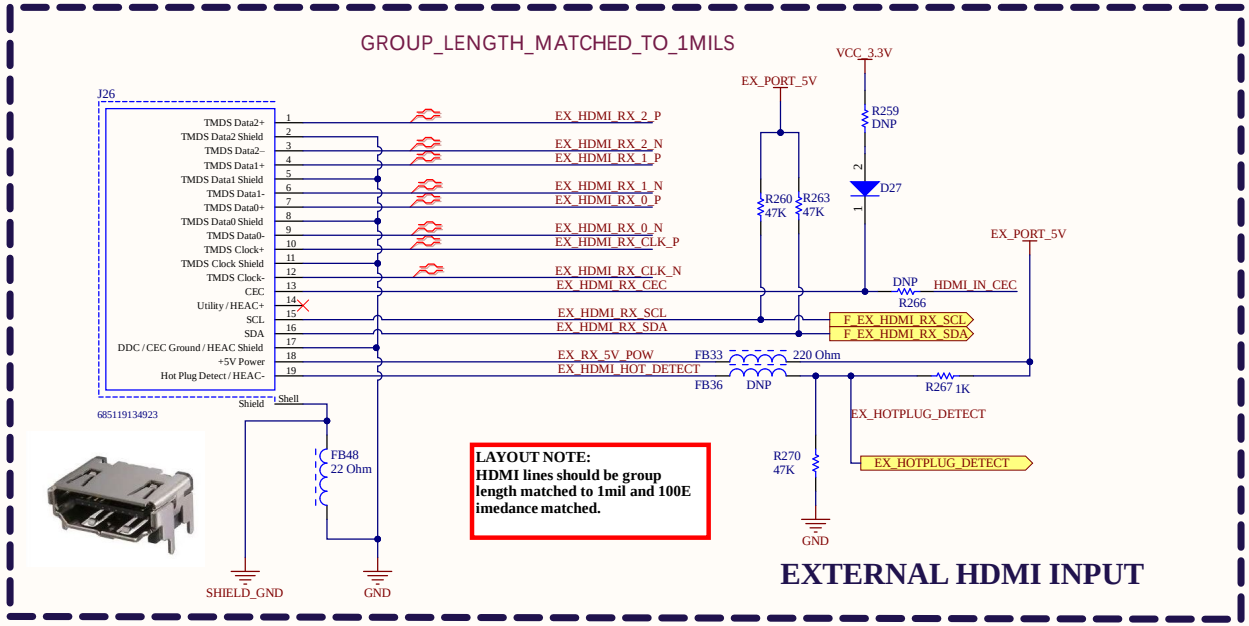

EXTERNAL HDMI INPUT

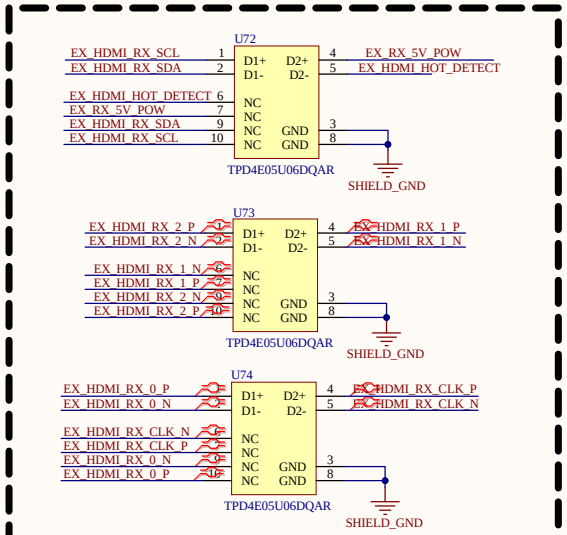

ESD FOR EXTERNAL CONNECTOR

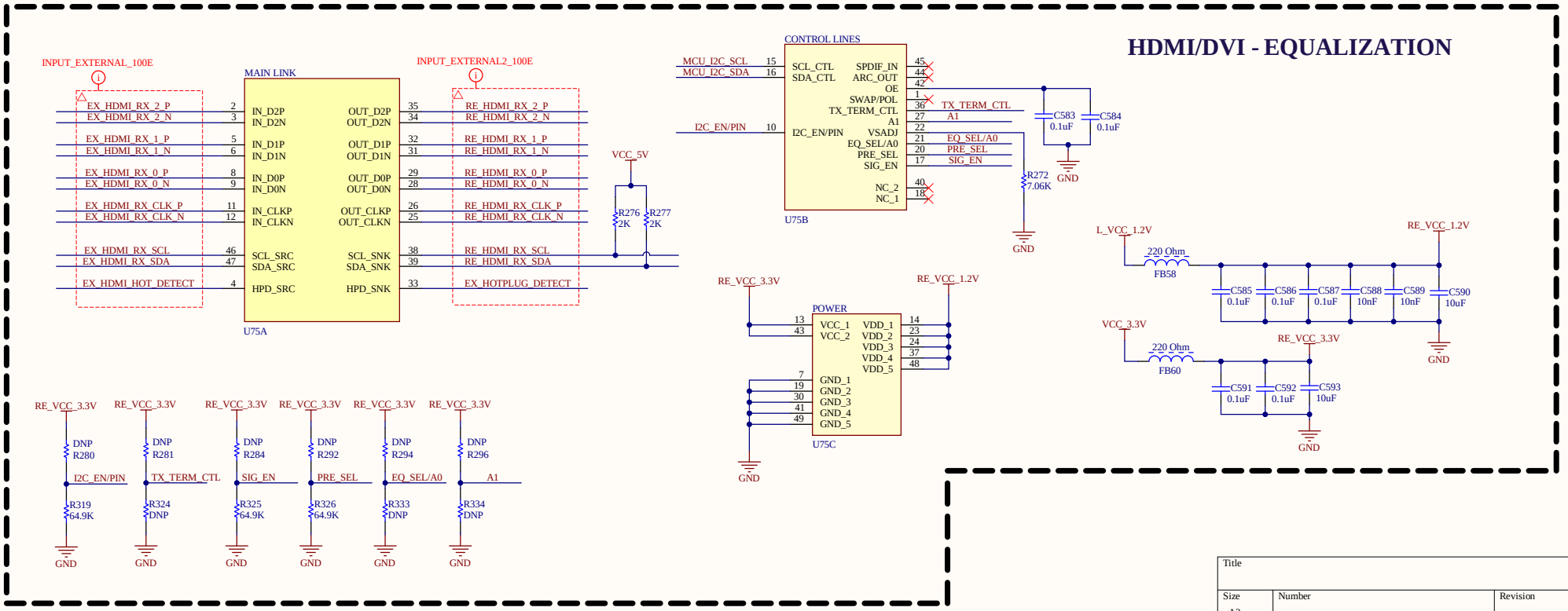

Title		
Size A3	Number	Revision
Date: 4-24-2023		Sheet of
File: Sheet1.SchDoc		Drawn By: