HDMI

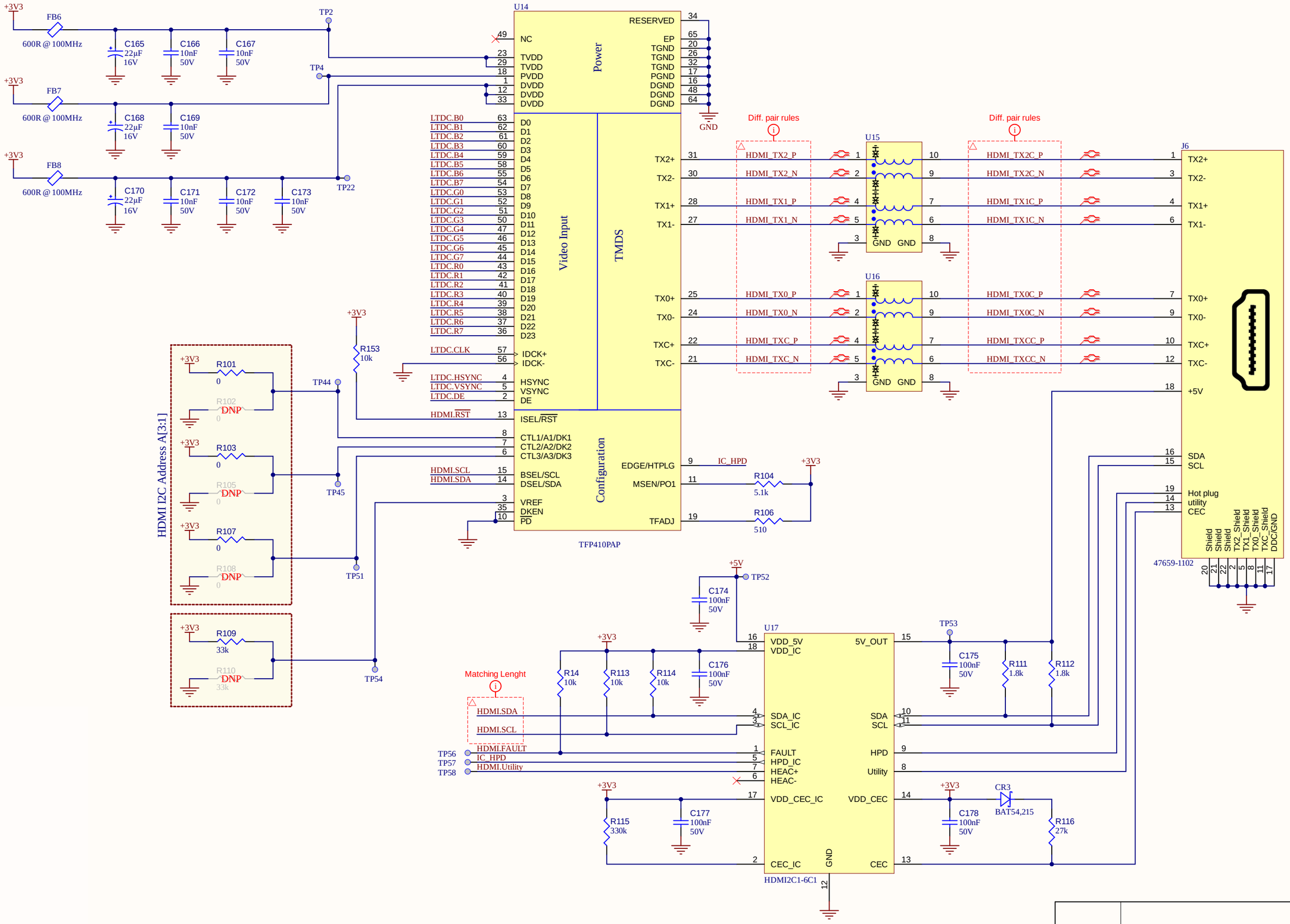
+3V3
FB6
600R @ 100MHz
C165 22µF 16V
C166 10nF 50V
C167 10nF 50V
TP2
FB7
600R @ 100MHz
C168 22µF 16V
C169 10nF 50V
TP4
FB8
600R @ 100MHz
C170 22µF 16V
C171 10nF 50V
C172 10nF 50V
C173 10nF 50V
TP22
U14
TFP410PAP
Power
Video Input
TMDS
Configuration
NC
TVDD
PVDD
DVDD
RESERVED
EP
TGND
PGND
DGND
GND
LTDC.B0
LTDC.B1
LTDC.B2
LTDC.B3
LTDC.B4
LTDC.B5
LTDC.B6
LTDC.B7
LTDC.G0
LTDC.G1
LTDC.G2
LTDC.G3
LTDC.G4
LTDC.G5
LTDC.G6
LTDC.G7
LTDC.R0
LTDC.R1
LTDC.R2
LTDC.R3
LTDC.R4
LTDC.R5
LTDC.R6
LTDC.R7
LTDC.CLK
IDCK+
IDCK-
LTDC.HSYNC
LTDC.VSYNC
LTDC.DE
HSYNC
VSYNC
DE
HDMI.RST
ISEL/RST
CTL1/A1/DK1
CTL2/A2/DK2
CTL3/A3/DK3
HDMI.SCL
HDMI.SDA
BSEL/SCL
DSEL/SDA
VREF
DKEN
PD
EDGE/HTPLG
MSEN/PO1
TFADJ
IC_HPD
R104 5.1k
R106 510
TX2+
TX2-
TX1+
TX1-
TX0+
TX0-
TXC+
TXC-
Diff. pair rules
HDMI_TX2_P
HDMI_TX2_N
HDMI_TX1_P
HDMI_TX1_N
HDMI_TX0_P
HDMI_TX0_N
HDMI_TXC_P
HDMI_TXC_N
HDMI_TX2C_P
HDMI_TX2C_N
HDMI_TX1C_P
HDMI_TX1C_N
HDMI_TX0C_P
HDMI_TX0C_N
HDMI_TXCC_P
HDMI_TXCC_N
U15
U16
J6
47659-1102
+5V
SDA
SCL
Hot plug utility
CEC
Shield
TX2_Shield
TX1_Shield
TX0_Shield
TXC_Shield
DDC/GND
HDMI I2C Address A[3:1]
R101 0
R102 DNP
R103 0
R105 DNP
R107 0
R108 DNP
R109 33k
R110 DNP 33k
TP44
TP45
TP51
TP54
R153 10k
TP52
C174 100nF 50V
U17
HDMI2C1-6C1
VDD_5V
VDD_IC
5V_OUT
SDA_IC
SCL_IC
FAULT
HPD_IC
HEAC+
HEAC-
VDD_CEC_IC
CEC_IC
HPD
Utility
VDD_CEC
CEC
TP53
C175 100nF 50V
R111 1.8k
R112 1.8k
R14 10k
R113 10k
R114 10k
C176 100nF 50V
Matching Lenght
HDMI.SDA
HDMI.SCL
HDMI.FAULT
IC_HPD
HDMI.Utility
TP56
TP57
TP58
R115 330k
C177 100nF 50V
C178 100nF 50V
CR3
BAT54,215
R116 27k