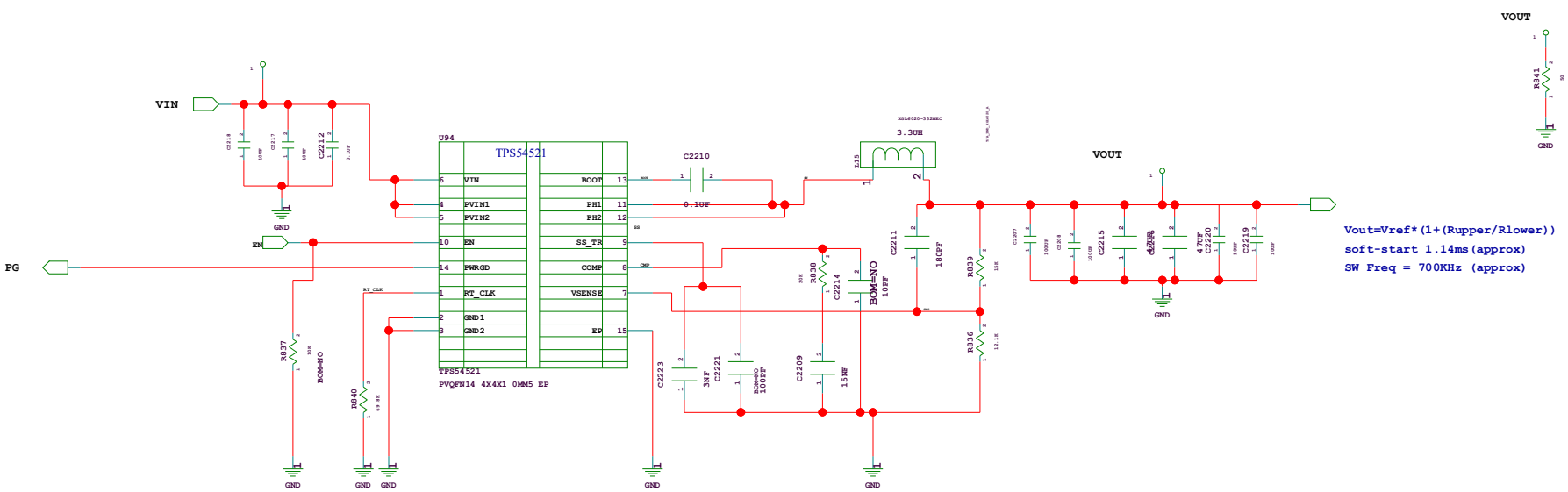

PGOOD : Pull-up on Open Drain in main schematics if needed

Description:

TJ1400-NR 5G DU PLATFORM

Te