ADI

ETHERNET

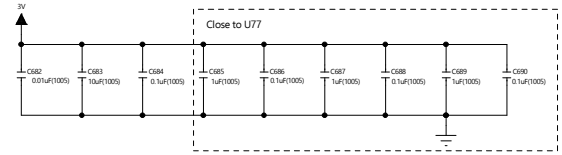

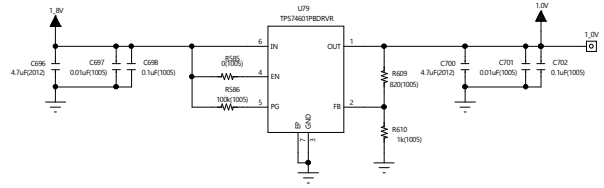

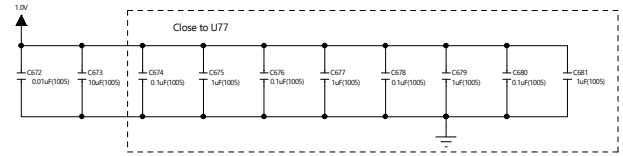

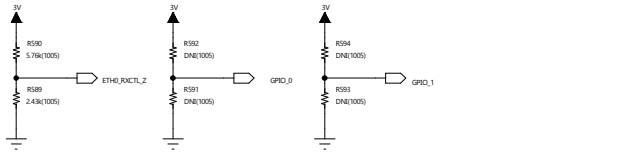

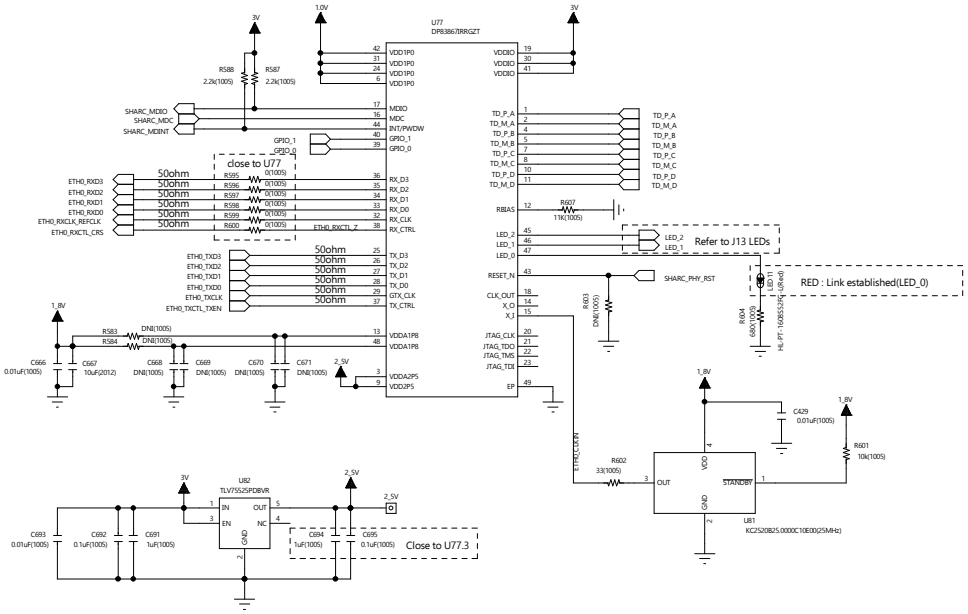
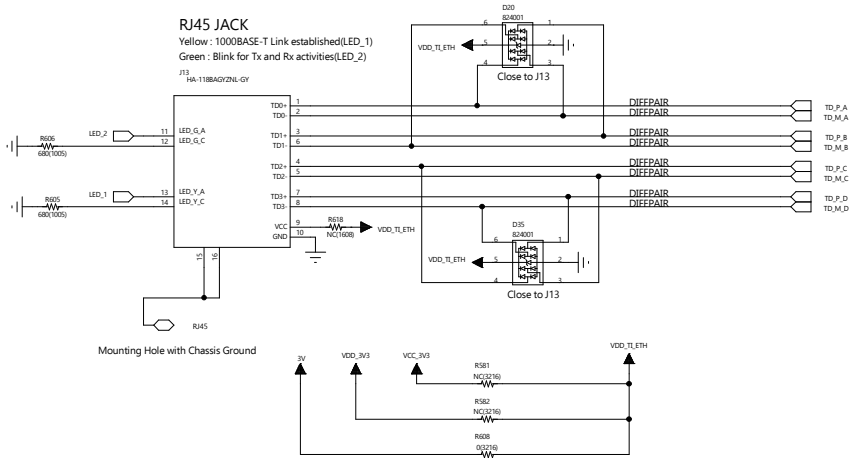
LAN_Connector