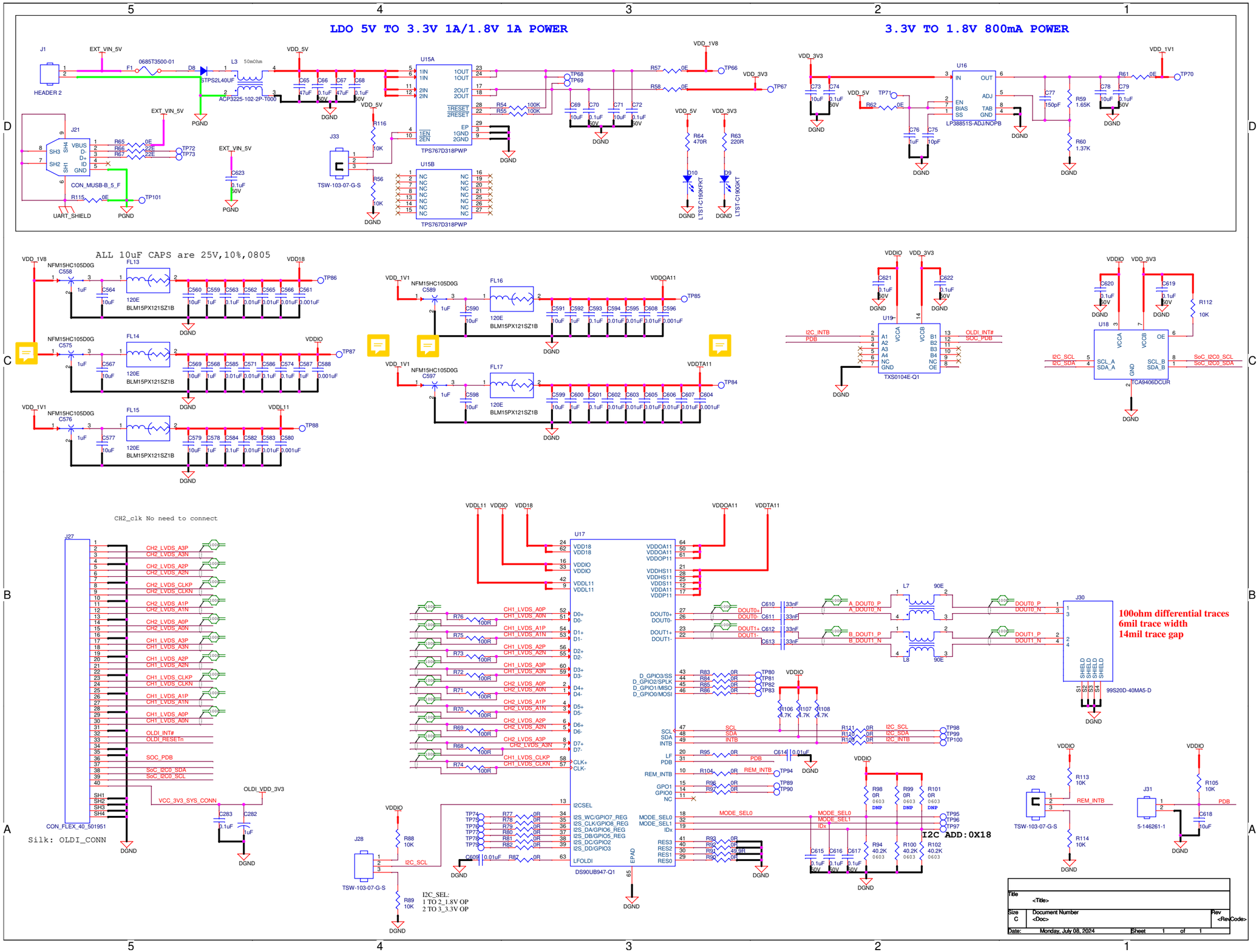
LDO 5V TO 3.3V 1A/1.8V 1A POWER
3.3V TO 1.8V 800mA POWER
ALL 10uF CAPS are 25V,10%,0805
CH2_clk No need to connect
100ohm differential traces
6mil trace width
14mil trace gap
I2C ADD:0X18
I2C_SEL:
1 TO 2_1.8V OP
2 TO 3_3.3V OP
Silk: OLDI_CONN
Title
<Title>
Size C
Document Number
<Doc>
Rev
<RevCode>
Date: Monday, July 08, 2024
Sheet 1 of 1