REVISION RECORD			
LTR	ECO NO:	APPROVED:	DATE:

I2C PULL_UP

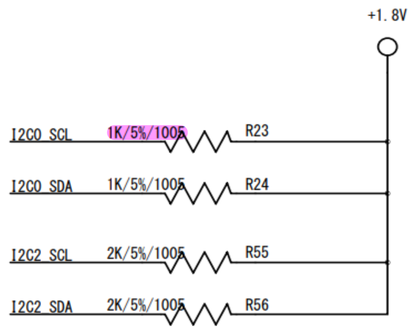

Serializer

ADDRESS : 0x30

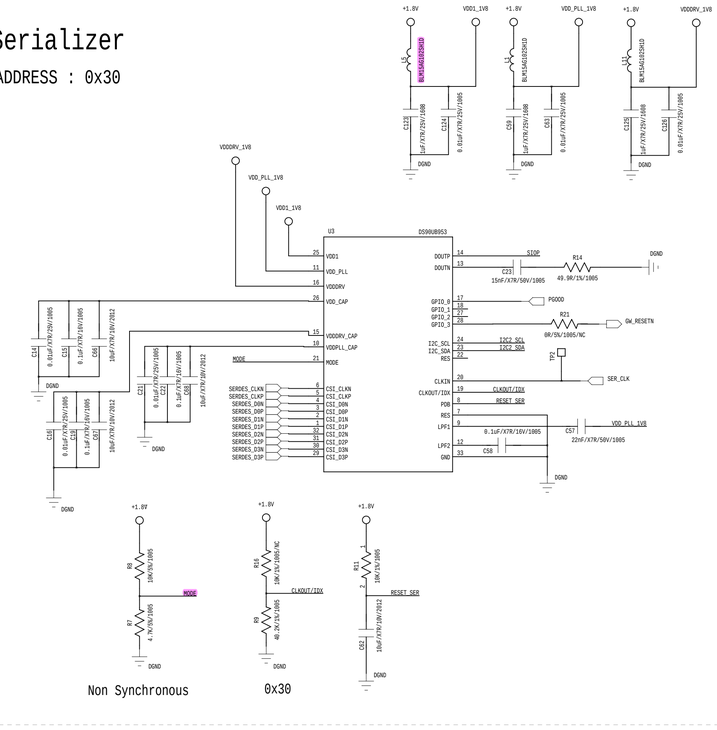

SER_OSC

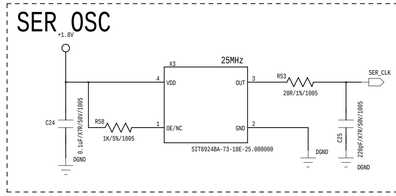

PMIC

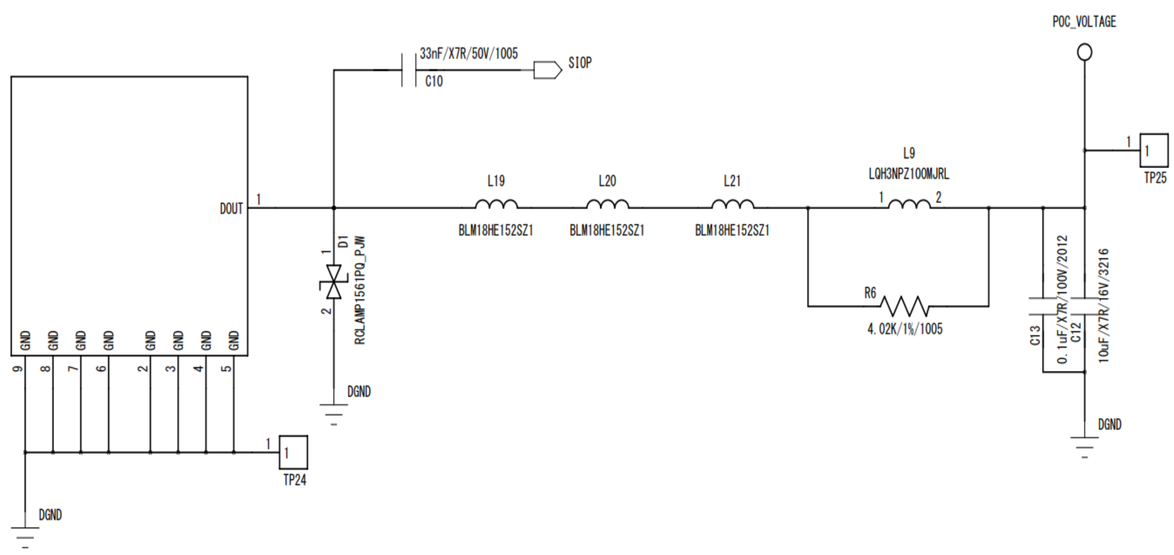

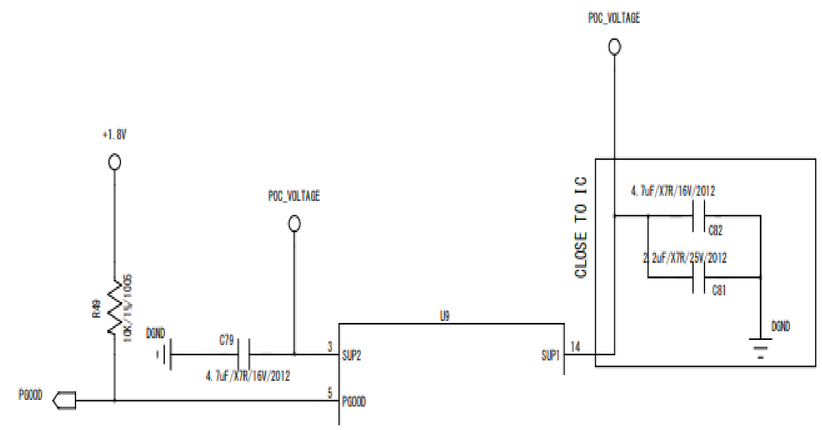

DRAWN: <Drawn By>	DATED: <Drawn Date>	COMPANY: <Company Name>			
		TITLE: <Title>			
CHECKED: <Checked By>	DATED: <Checked Date>	CODE: <Code>	SIZE: D	DRAWING NO: <Drawing Number>	REV: <Revision>
QUALITY CONTROL: <QC By>	DATED: <QC Date>				
RELEASED: <Released By>	DATED: <Release Date>	SCALE: <Scale>		SHEET: 1 OF 3	