Port Controller - Primary TPS65983

TPS65983 - USB3.1
PD

I2C1: TPS65983 to/from TR
I2C2: Primary TPS65983 to/from Secondary TPS65983
SPI/EE: TPS65983 to/from NVM & AR

UART: Primary TPS65983 to/from Secondary TPS65983

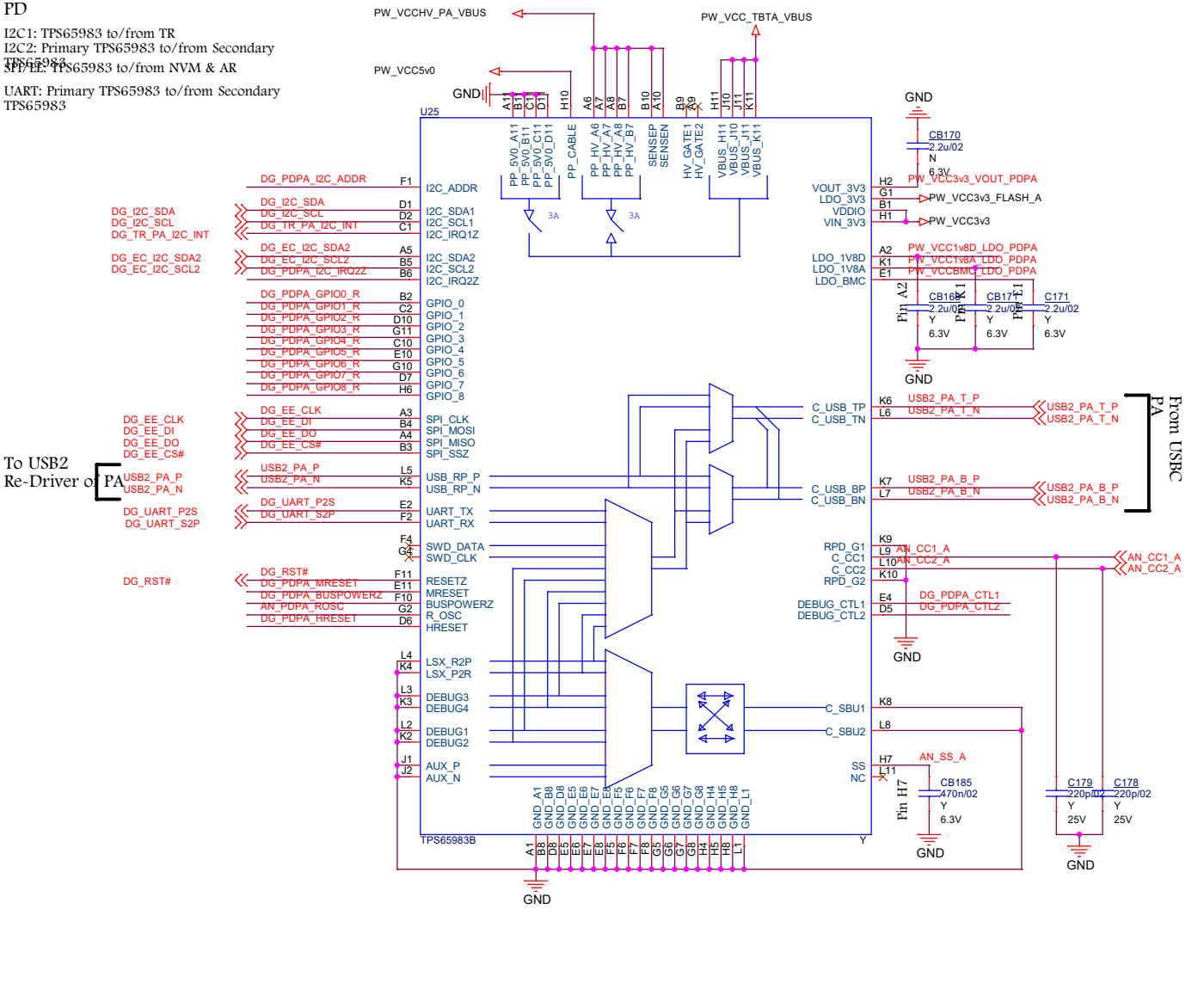

HW
Pull-Up/Pull-Down

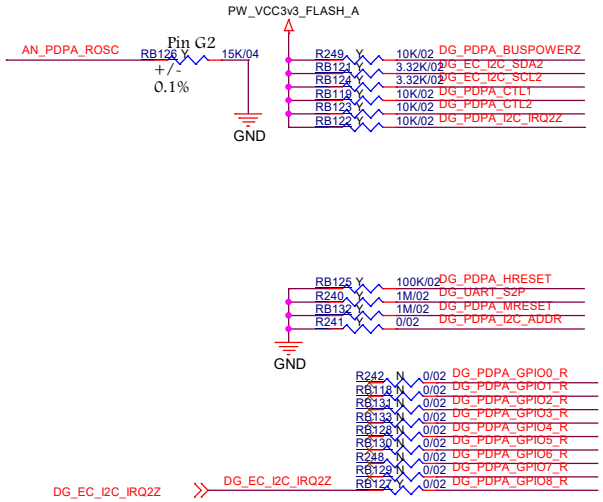

SPD:
DG_PDPA_BUSPOWERZ = '1'
RPD_G1 = GND
RPD_G2 = GND

Primary TPS65983 I2C Address:
bit2: DG_PDPA_I2C_ADDR ('0')
bit1: DG_PDPA_CTL1 ('1')
bit0: DG_PDPA_CTL2 ('1')

I2C_ADDR:
'0' - Sets TPS65983 as Primary
'1' - Sets TPS65983 as Secondary

Power Supply Decoupling

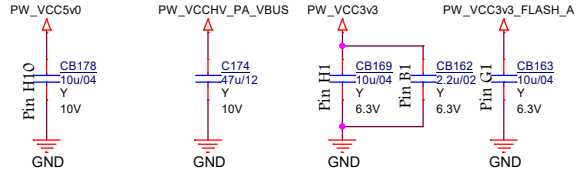

Supported Source PDOs:
PP_HV: 5v@ 3A; 15W

Title	IC_Port A - TPS65983		
Size A3	Document Number Tetris_TB3_MB		Rev 1.1
Date: Tuesday, March 01, 2022	Sheet 8 of 17		