REVISION RECORD			
LTR	ECO NO:	APPROVED:	DATE:

MIPI DSI TO LVDS

Note: If best EMI practices are followed for MIPI CSI/DSI signals, there is no need for common mode choke filters. You may choose to have placeholders for common mode depending upon your design constraints.
Extreme care must be taken that no stubs are created by doing so.

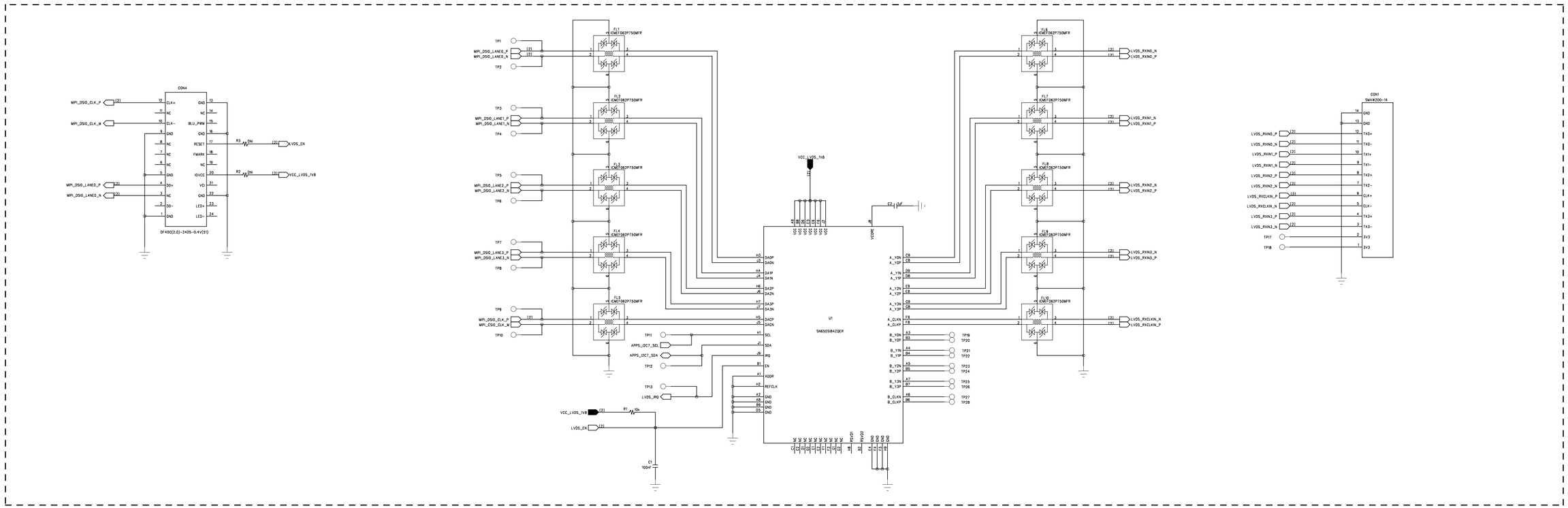

POWER

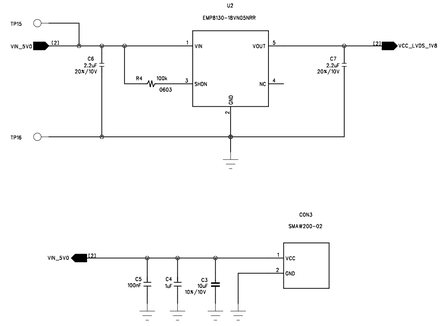

Touch

Qualcomm improveTouch touchscreen

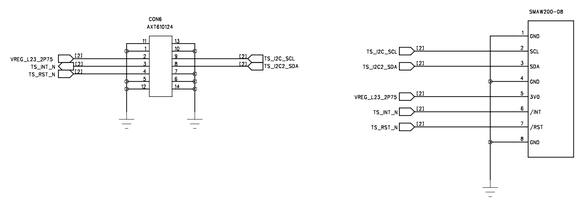

KEY PAD

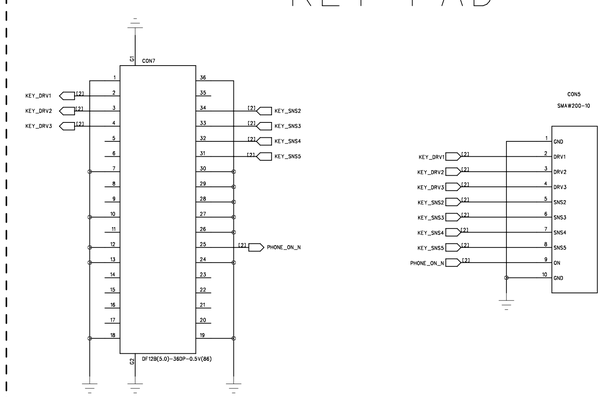

DRAWN: N K Y	DATED: 2017-02-14	COMPANY: <Company Name>	
CHECKED: <Checked By>	DATED: <Checked Date>	TITLE: PS2	
QUALITY CONTROL: <QC By>	DATED: <QC Date>	CODE: <Code> / SIZE: D / DRAWING NO: <Drawing Number>	REV: A
RELEASED: <Released By>	DATED: <Release Date>	SCALE: <Scale>	SHEET: 2 OF 3