10K PULL UP is given to the OC pin in TPS2024 IC(asper ic datasheet)

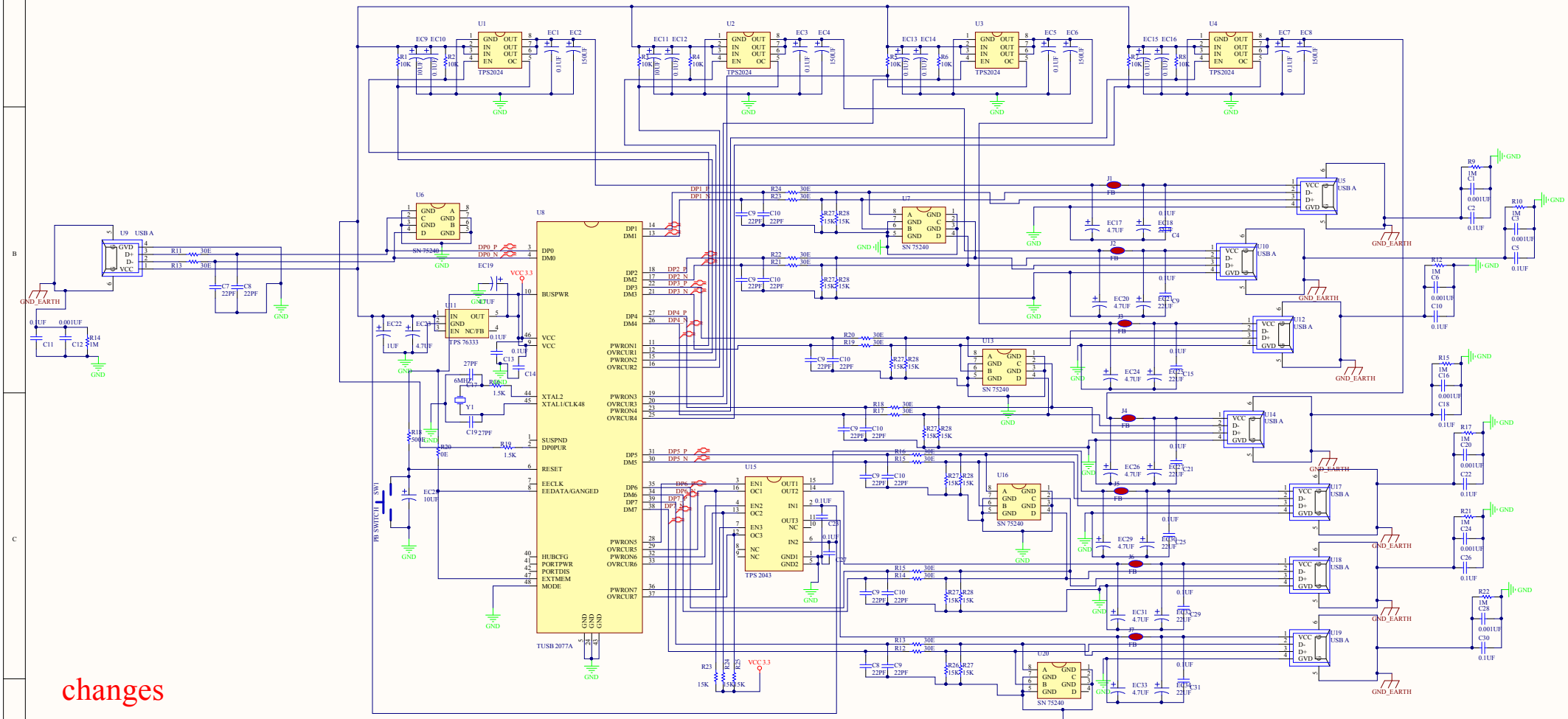

changes

1. resistors added at DATA pins of input USB side
2. capacitors added after resistors at input USB side
3. ferrite beed circuit added to the power supply pin of the output USB connectors
4. earth point added to all USB connectors
5. earth to ground circuit added to all USB connectors AS PER THE 2077A EVM REFERENCE CIRCUIT
6. 15k pullup resistors added from 3.3v to OC pins of the TPS2043
7. 22pf, 30e resistor, 15k resistor added to every data+ and data- pin of the output ports

{since additional circuitry added, designators are changed}