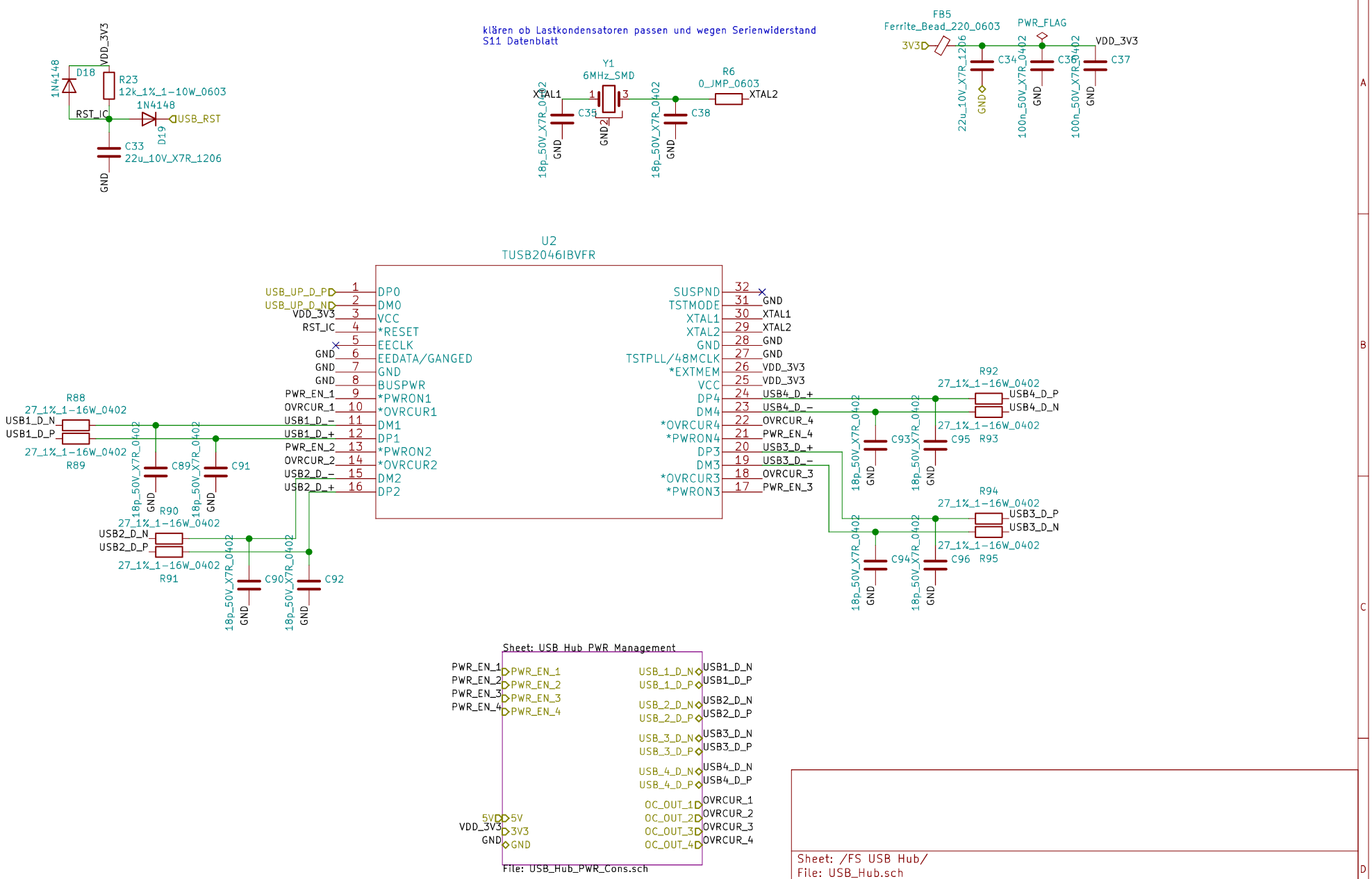

Sheet: /FS USB Hub/
File: USB_Hub.sch

Title:

Size: A4	Date:	Rev:
KiCad E.D.A. kicad (5.1.6)-1		Id: 3/13

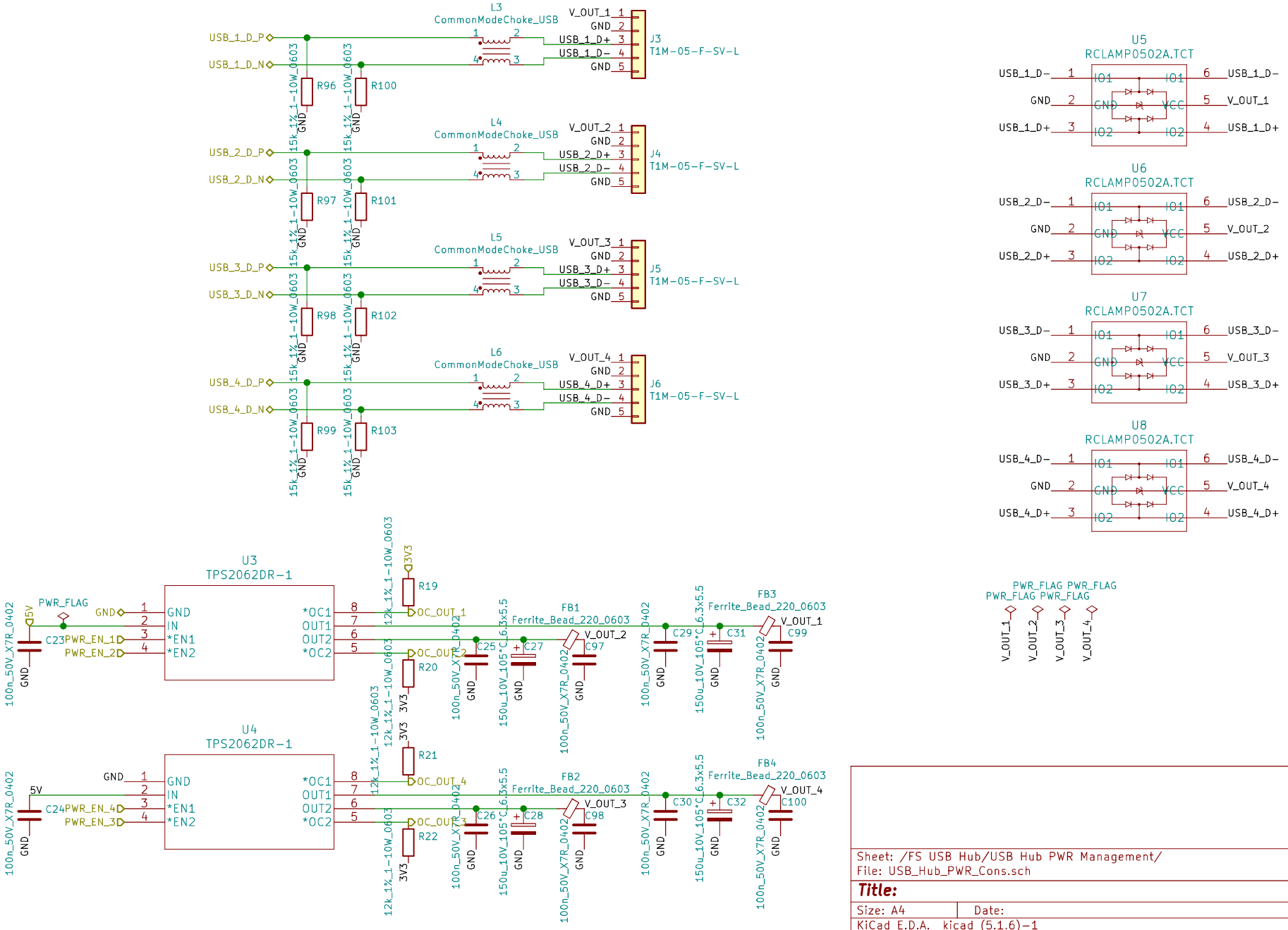

Sheet: /FS USB Hub/USB Hub PWR Management/
File: USB_Hub_PWR_Cons.sch

Title:

Size: A4	Date:	Rev:
KiCad E.D.A. kicad (5.1.6)-1		Id: 4/13