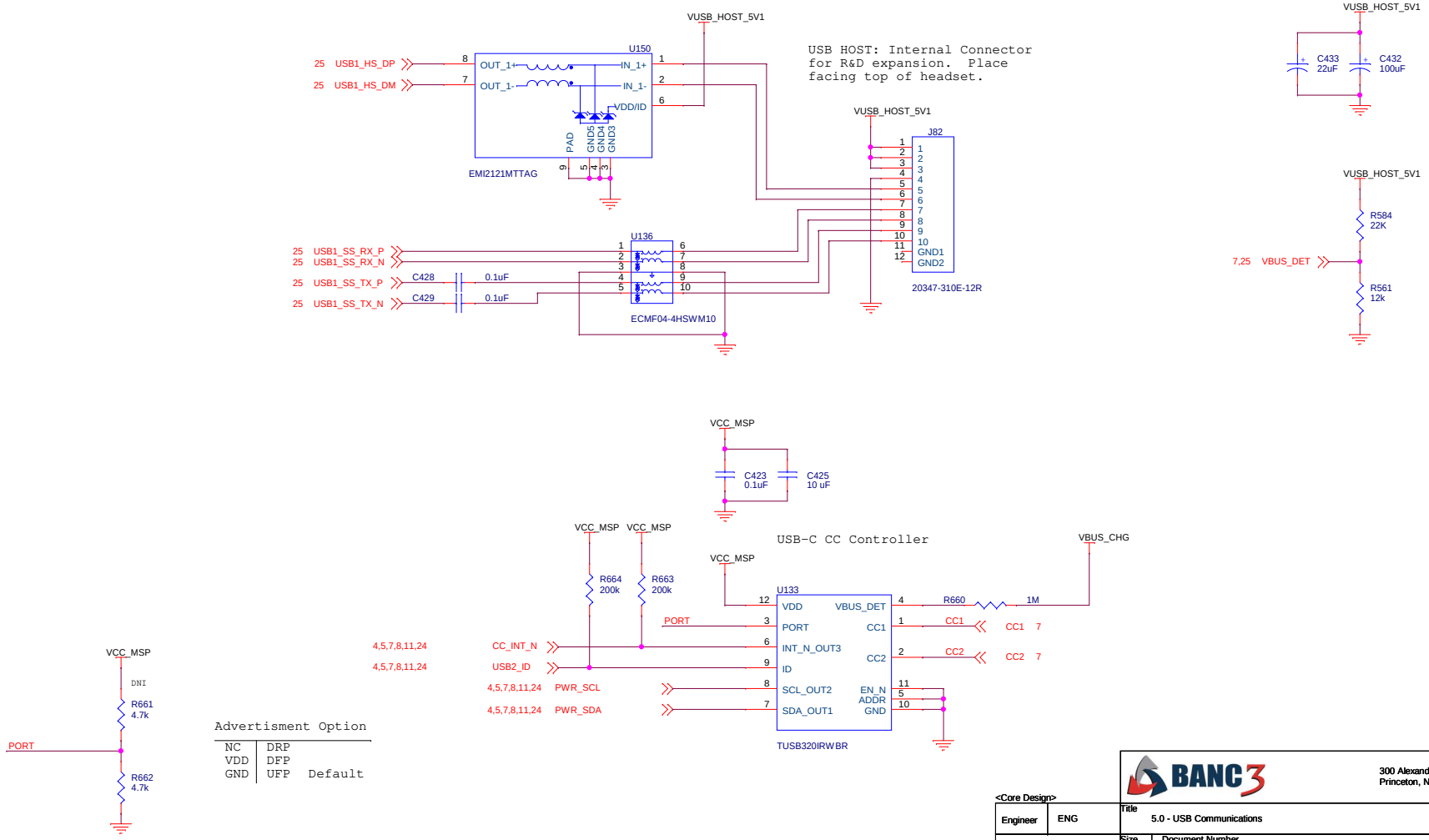

BANC3

300 Alexander Park
Princeton, NJ 08540

<Core Design>

Engineer	ENG	Title: 5.0 - USB Communications	
Confidential		Size: B	Document Number: <Doc>	Rev: ?
		Date: Thursday, May 31, 2018	Sheet 1 of 1