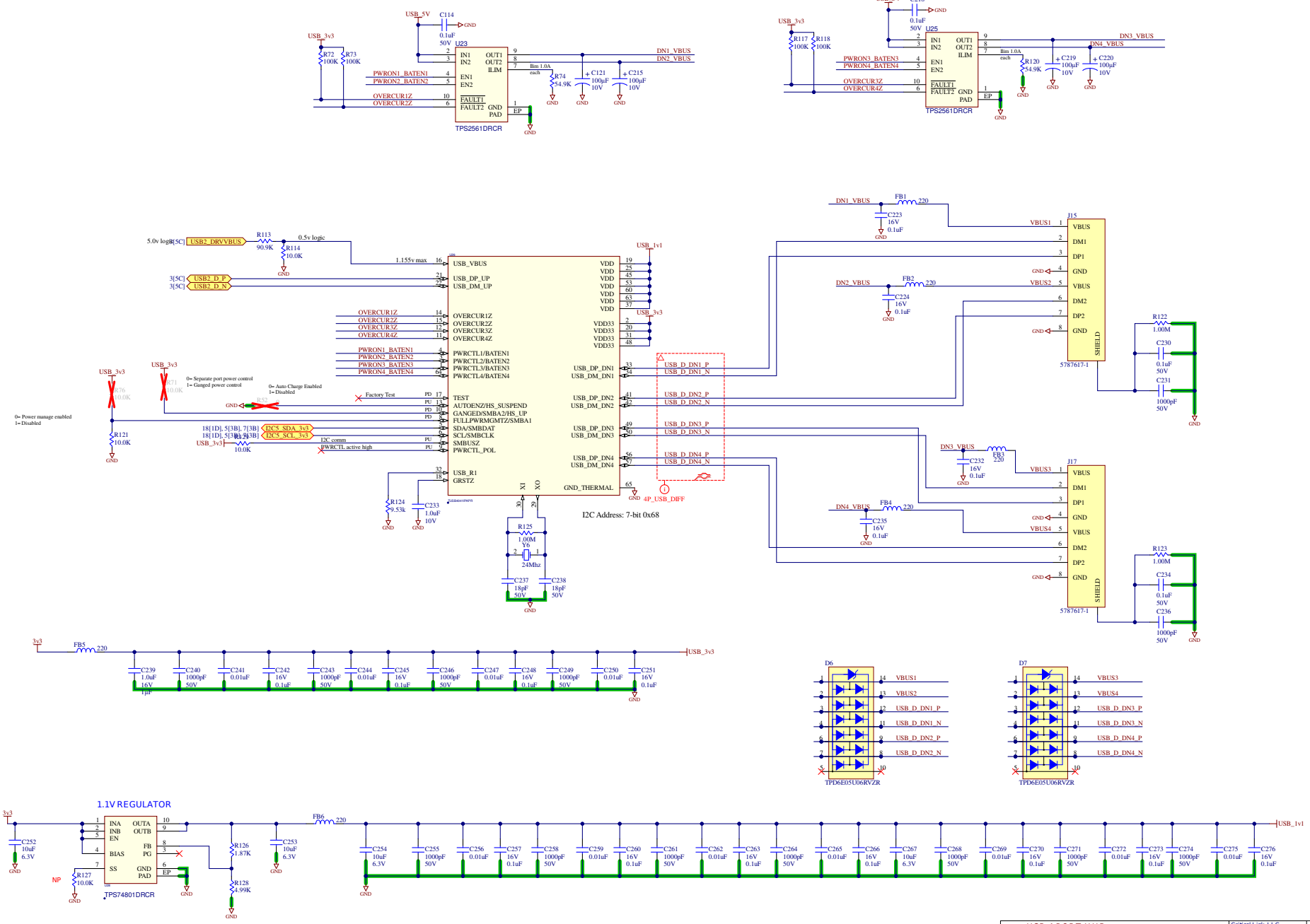

Title: USB 4 PORT HUB			Critical Link, LLC 6712 Brooklawn Parkway Syracuse, NY 13211 315.425.4045 www.criticallink.com
Size: C	Number: 80-001317RI-1	Revision: D	
Date: 7/20/2020	Time: 1:54:46 PM	Sheet 8 of 18	
SVN: 375	File: USB_4Port.SchDoc		