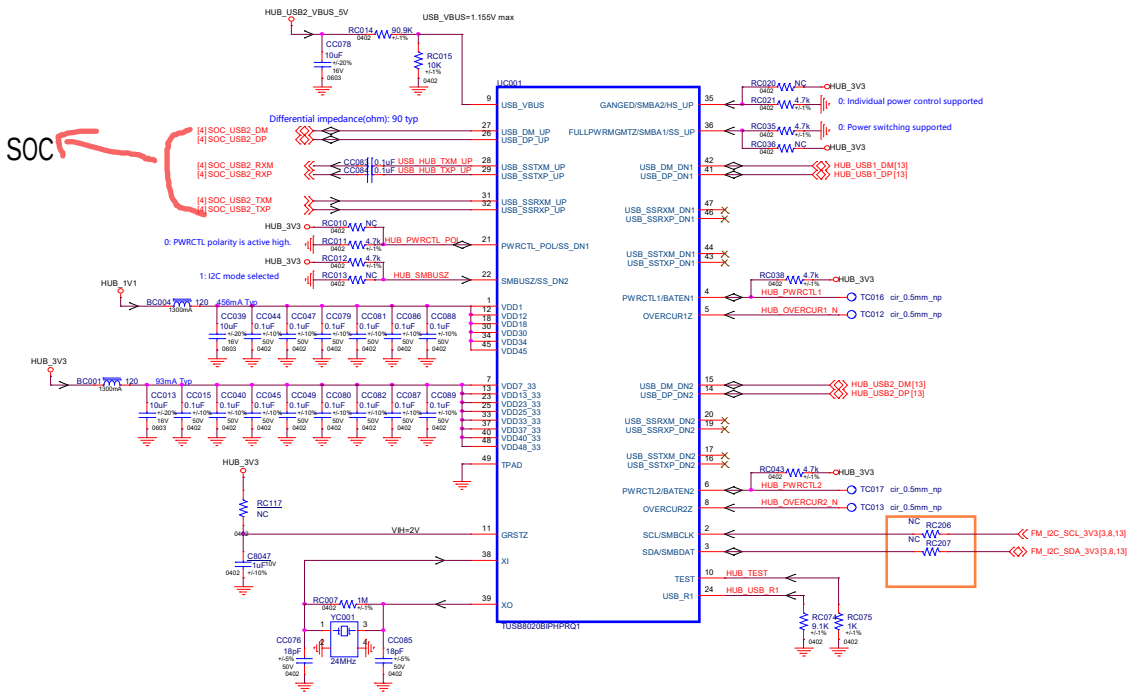
SOC
HUB_USB2_VBUS_5V
USB_VBUS=1.155V max
UC001
Differential impedance(ohm): 90 typ
[4] SOC_USB2_DM
[4] SOC_USB2_DP
[4] SOC_USB2_RXM
[4] SOC_USB2_RXP
[4] SOC_USB2_TXM
[4] SOC_USB2_TXP
0: PWRCTL polarity is active high.
1: I2C mode selected
HUB_PWRCTL_PO
HUB_SMBUSZ
HUB_1V1
HUB_3V3
456mA Typ
93mA Typ
VIH=2V
TPUSB8020BIPHPRQ1
0: Individual power control supported
0: Power switching supported
HUB_USB1_DM[13]
HUB_USB1_DP[13]
HUB_USB2_DM[13]
HUB_USB2_DP[13]
HUB_PWRCTL1
HUB_OVERCUR1_N
HUB_PWRCTL2
HUB_OVERCUR2_N
TC016 cir_0.5mm_np
TC012 cir_0.5mm_np
TC017 cir_0.5mm_np
TC013 cir_0.5mm_np
FM_I2C_SCL_3V3[3,8,13]
FM_I2C_SDA_3V3[3,8,13]
HUB_TEST
HUB_USB_R1

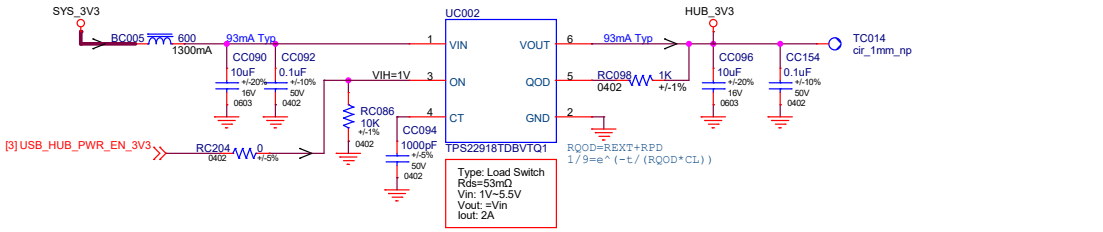
SYS_3V3
BC005 600
1300mA
93mA Typ
VIH=1V
[3] USB_HUB_PWR_EN_3V3
RC204 0
UC002
VIN
VOUT
ON
QOD
CT
GND
TPS22918TDBVTQ1
HUB_3V3
TC014
cir_1mm_np
RQOD=REXT+RPD
1/9=e^(-t/(RQOD*CL))
Type: Load Switch
Rds=53mΩ
Vin: 1V~5.5V
Vout: =Vin
Iout: 2A

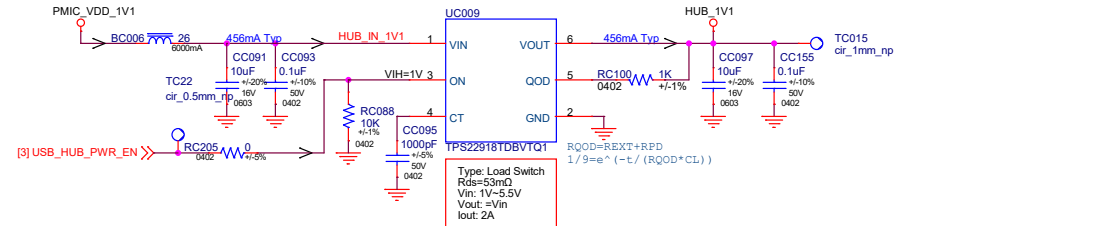
PMIC_VDD_1V1
BC006 26
6000mA
456mA Typ
HUB_IN_1V1
VIH=1V
TC22
cir_0.5mm_np
[3] USB_HUB_PWR_EN
RC205 0
UC009
VIN
VOUT
ON
QOD
CT
GND
TPS22918TDBVTQ1
HUB_1V1
TC015
cir_1mm_np
RQOD=REXT+RPD
1/9=e^(-t/(RQOD*CL))
Type: Load Switch
Rds=53mΩ
Vin: 1V~5.5V
Vout: =Vin
Iout: 2A

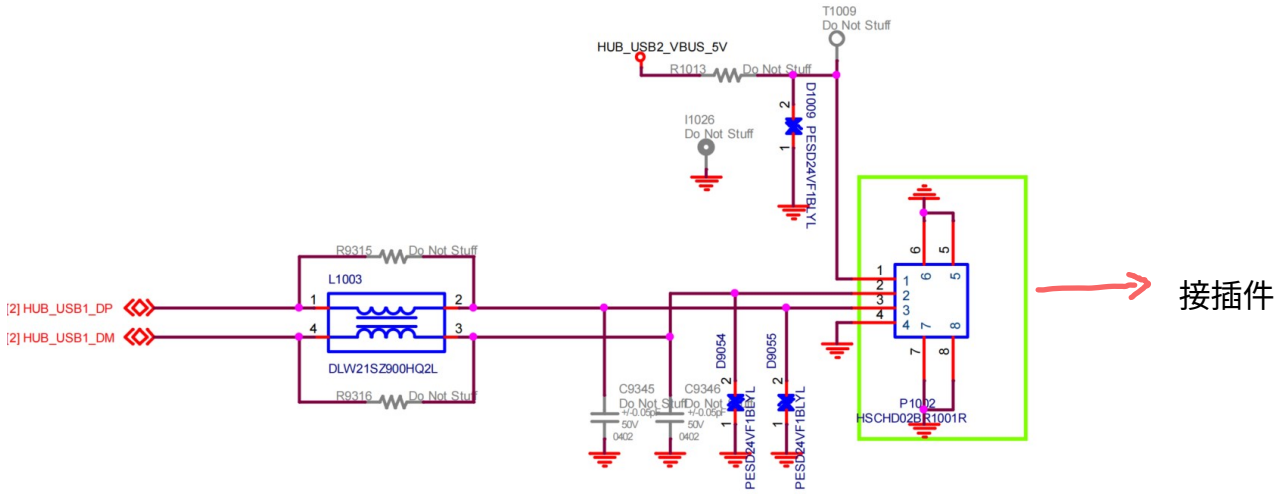
T1009
Do Not Stuff
HUB_USB2_VBUS_5V
R1013
Do Not Stuff
I1026
Do Not Stuff
D1009 PESD24VF1BLYL
R9315
Do Not Stuff
L1003
[2] HUB_USB1_DP
[2] HUB_USB1_DM
DLW21SZ900HQ2L
R9316
Do Not Stuff
C9345
Do Not Stuff
C9346
Do Not Stuff
D9054
D9055
PESD24VF1BLYL
P1002
HSCHD02BR1001R
接插件