USB2.0 and USB3.0

USB2.0侧置接口

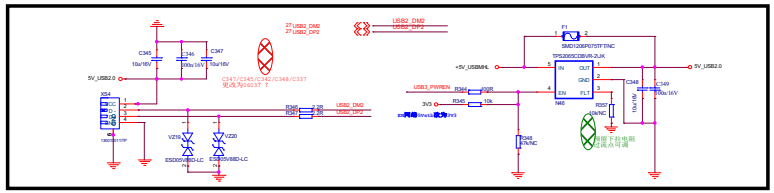

USB3.0侧置接口

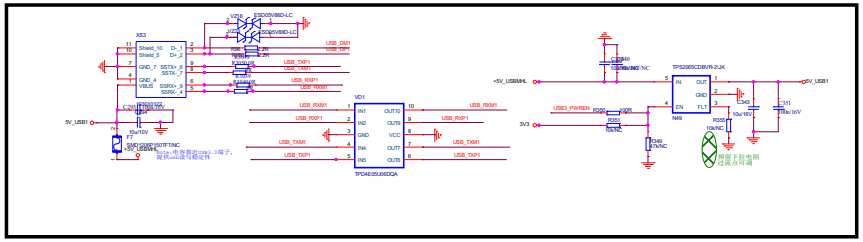

USB3.0 CAM接口

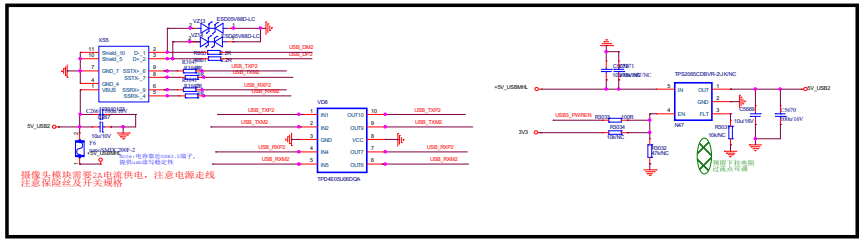

前置HDMI/USB及防护

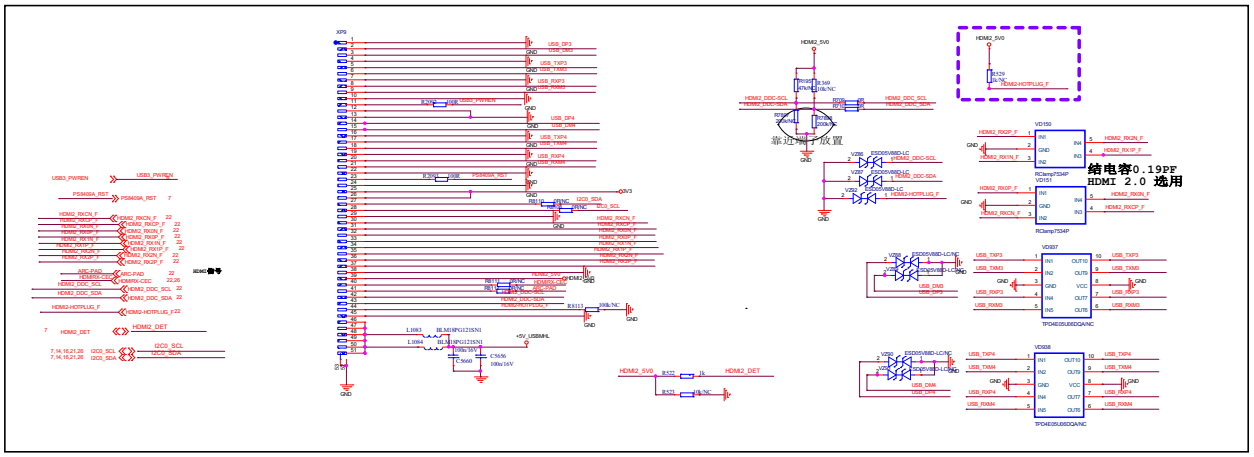

USB3.0 HUB

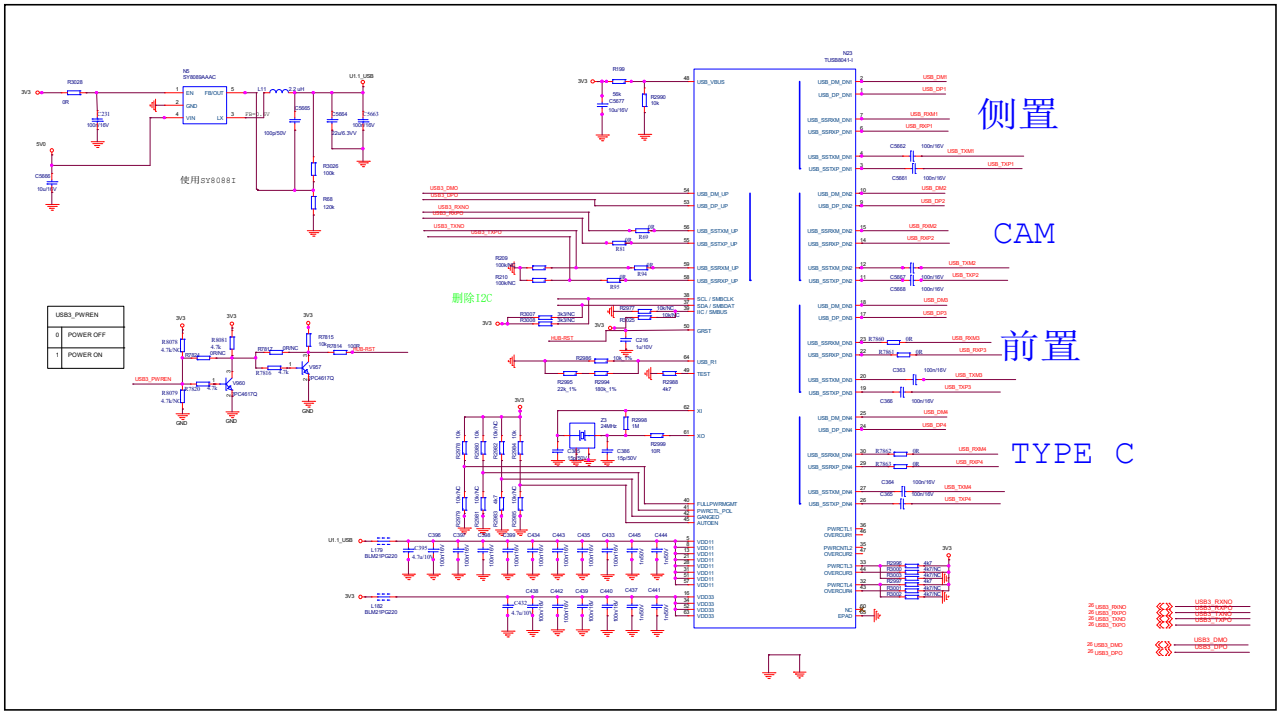

Title	<Page information>		
Size D	Document Number <Doc>		Rev 1
Date: Thursday, June 25, 2020		Sheet 25 of 27	