USB TYPE-C MUX, DFP2

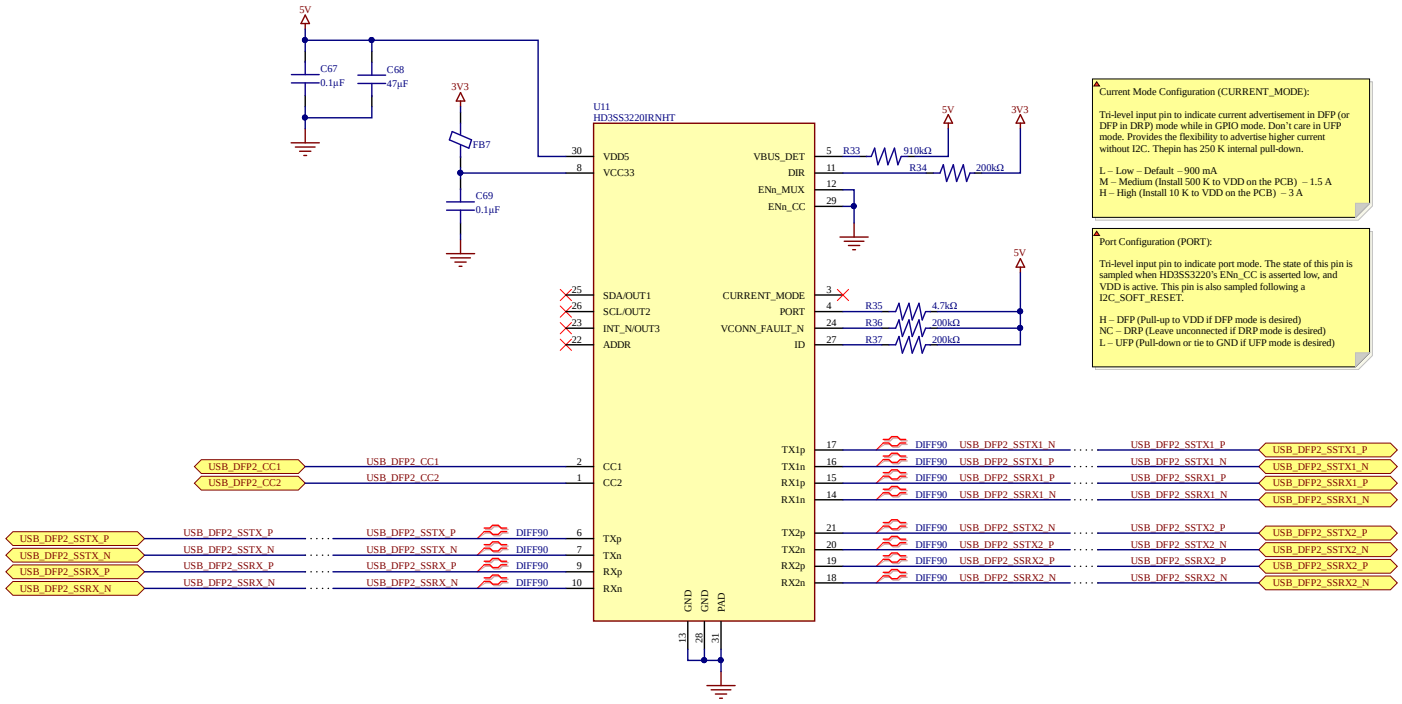

Current Mode Configuration (CURRENT_MODE):

Tri-level input pin to indicate current advertisement in DFP (or DFP in DRP) mode while in GPIO mode. Don't care in UFP mode. Provides the flexibility to advertise higher current without I2C. Thepin has 250 K internal pull-down.

L – Low – Default – 900 mA
M – Medium (Install 500 K to VDD on the PCB) – 1.5 A
H – High (Install 10 K to VDD on the PCB) – 3 A

Port Configuration (PORT):

Tri-level input pin to indicate port mode. The state of this pin is sampled when HD3SS3220's ENn_CC is asserted low, and VDD is active. This pin is also sampled following a I2C_SOFT_RESET.

H – DFP (Pull-up to VDD if DFP mode is desired)
NC – DRP (Leave unconnected if DRP mode is desired)
L – UFP (Pull-down or tie to GND if UFP mode is desired)