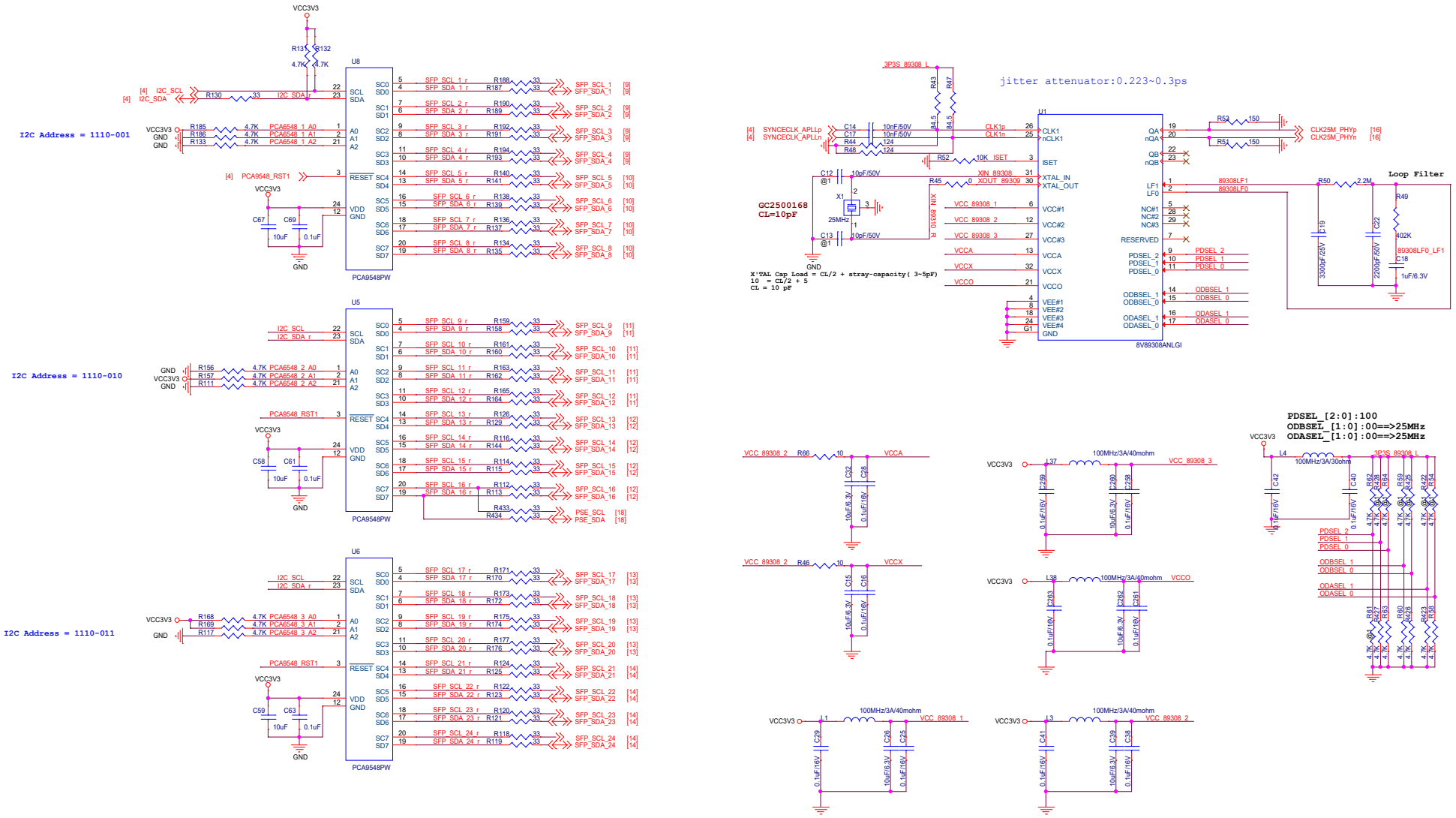

Accton Inc.	Making Partnership Work
Model Name	ASF4628BBS7-0714-61P
Rev	R01
Size	C
Page Name	Clock & I2C Buffer
Engineer	QQ Chiu
Date:	Tuesday, October 13, 2015
Sheet	7 of 24