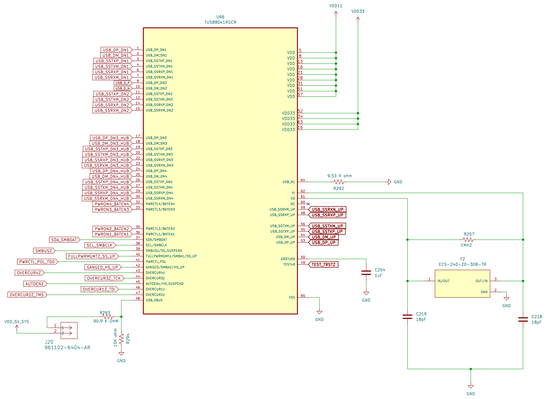

USB CONN 1

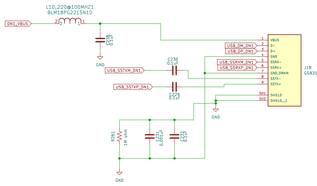

USB CONN 2

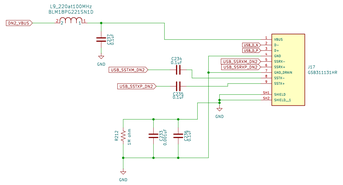

3.3V

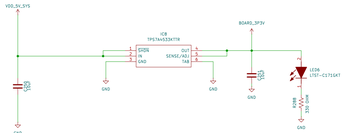

USB CONN 3

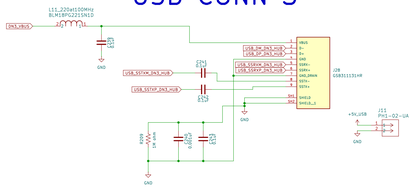

1.1V

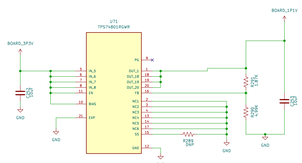

USB CONN 4

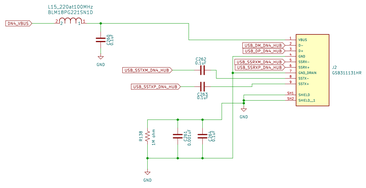

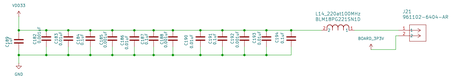

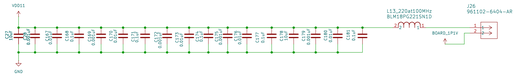
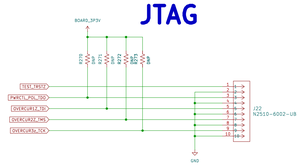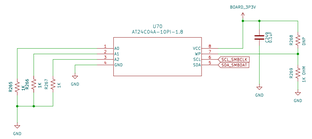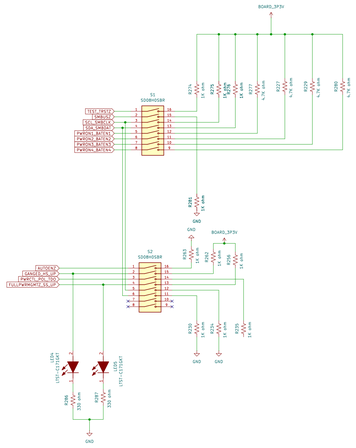
JTAG