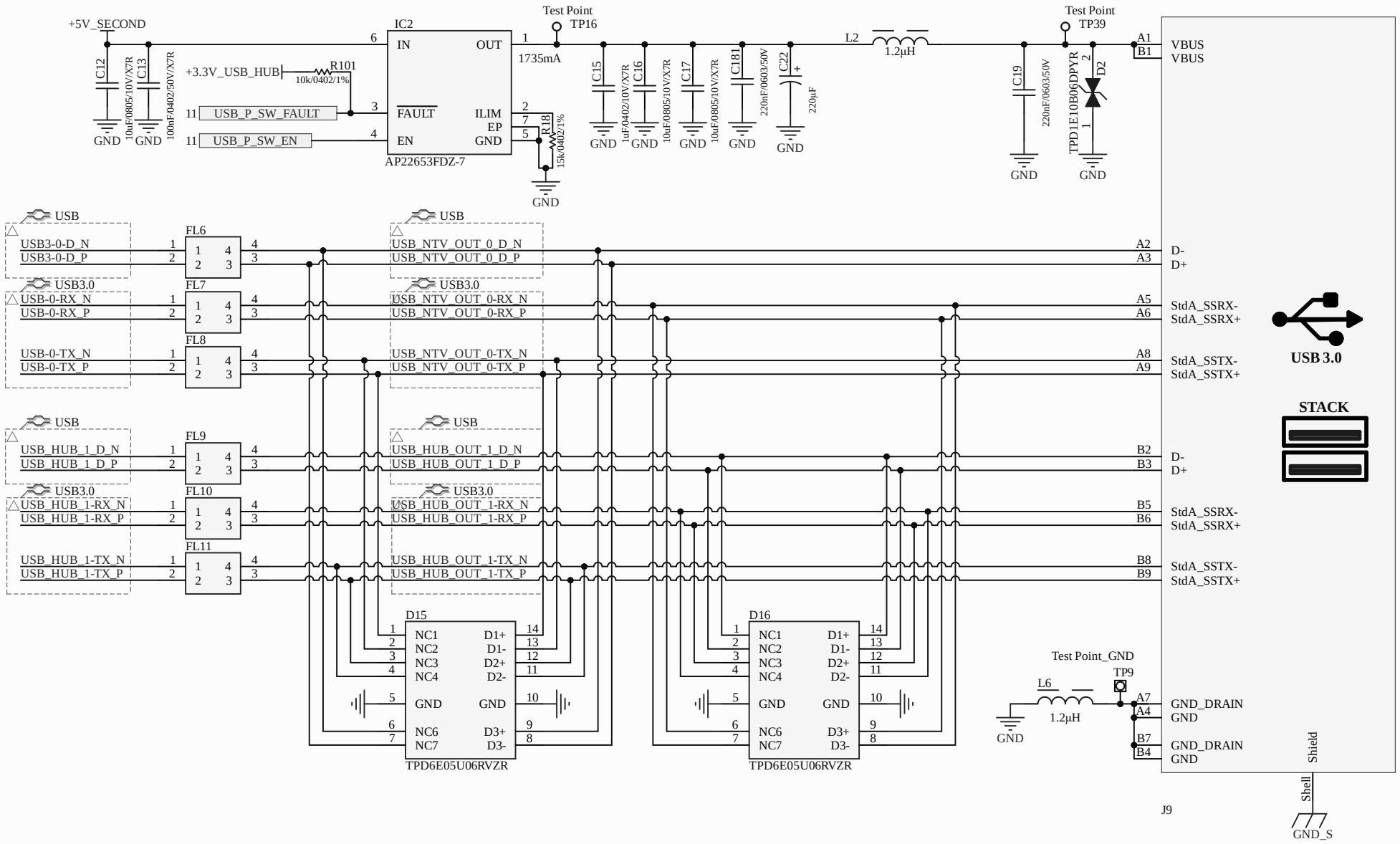

Title		
Size A4	Number	Revision
Date: 6/03/2025	Sheet of	
File: C:\Users\..\USB 3.0 Port.SchDoc	Drawn By:	