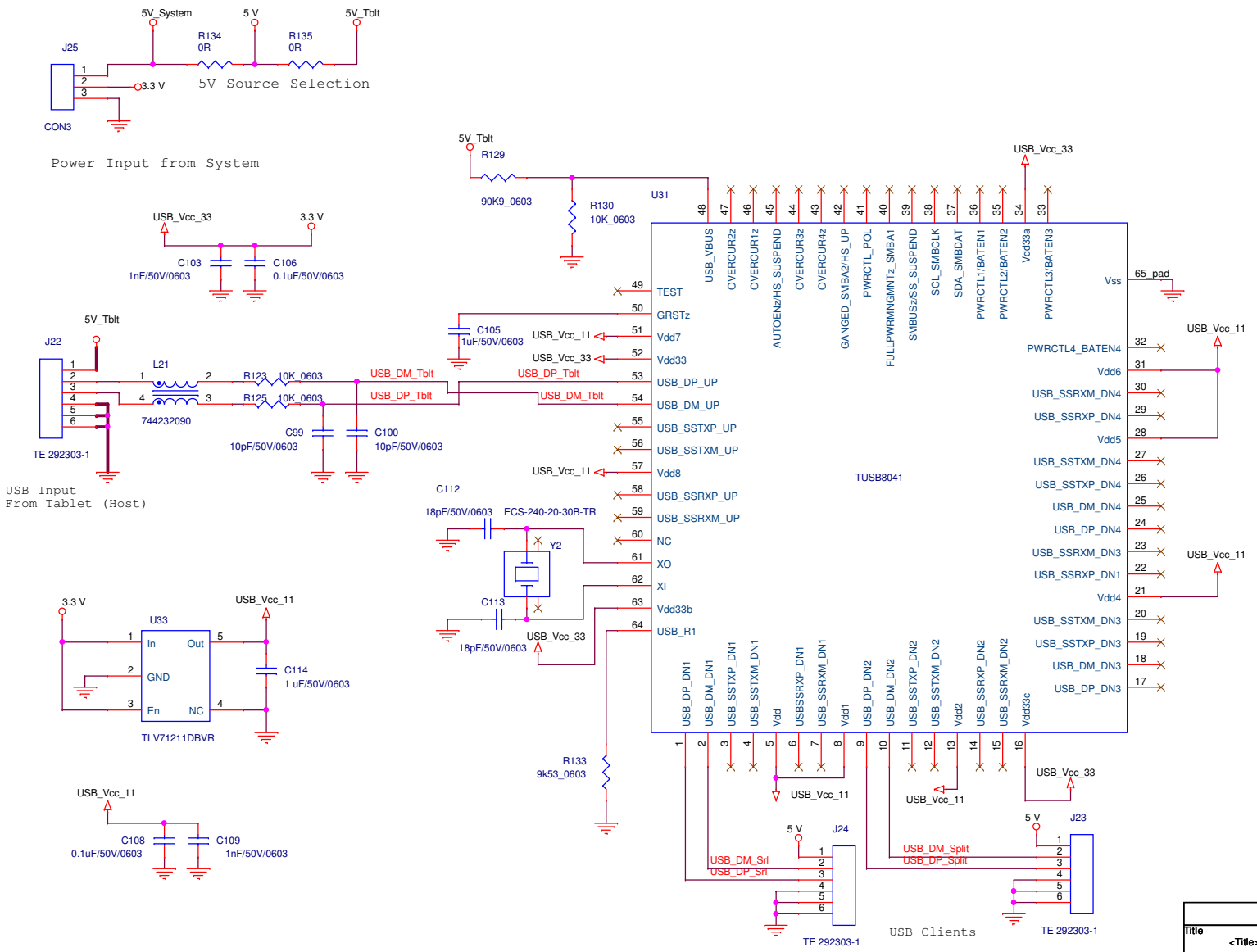

Title	<Title>		
Size B	Document Number <Doc>		Rev <RevCode>
Date: Tuesday, February 17, 2015	Sheet 1 of 1		