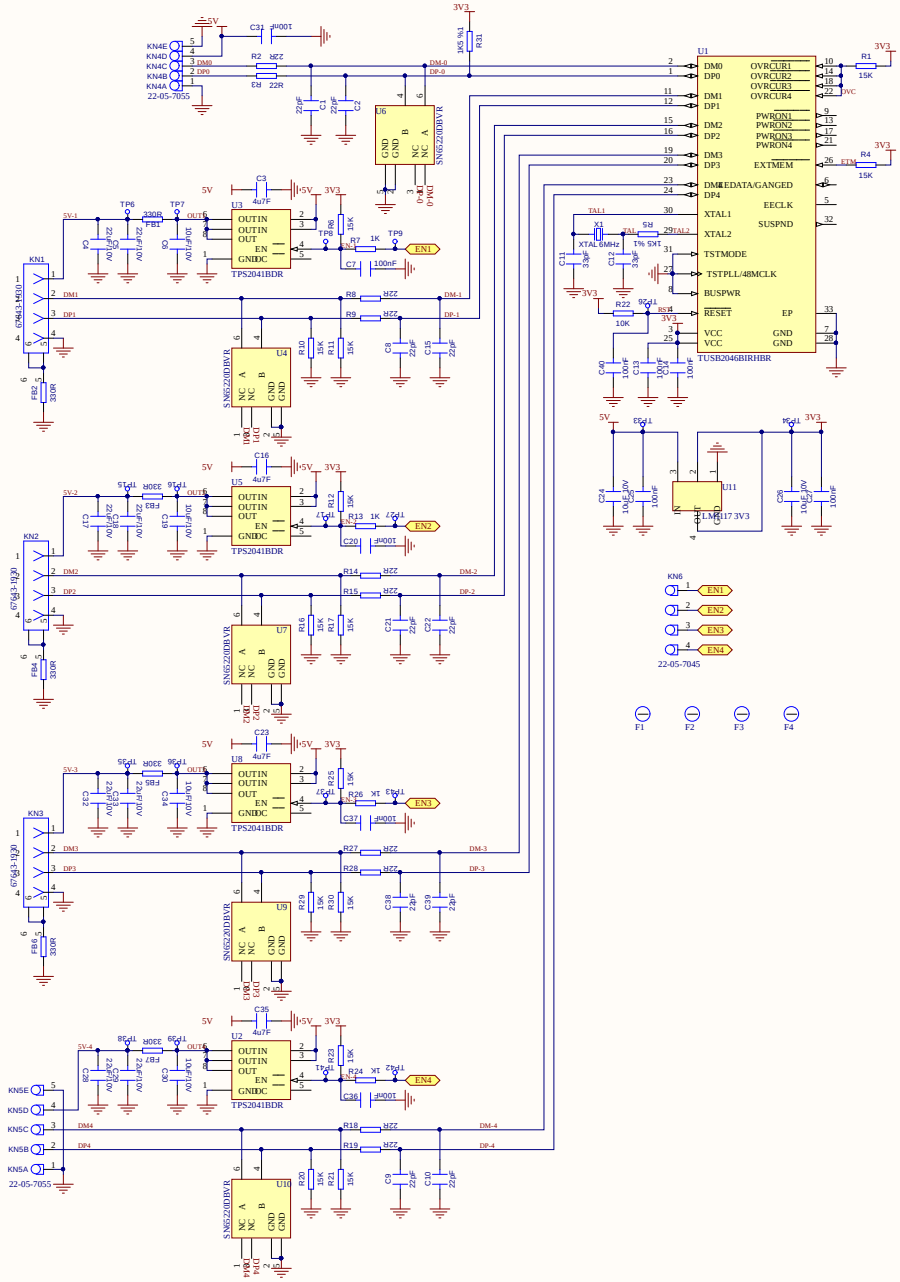

Title		
Size A2	Number	Revision
Date: 16.08.2017	Sheet of	
File: L:\EKSG\..\USB-Hub-G01.SchDoc	Drawn By:	