I2C 驱动

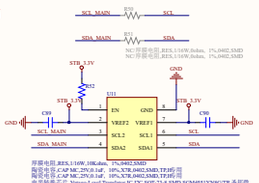

12V_IN => AO_5V

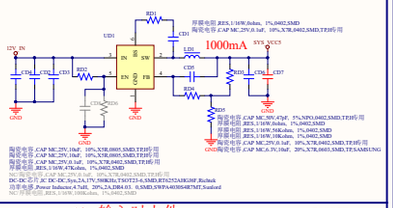

12v 输入时上件

版号：1，Vout=0.8*(1+RD3/RD5)=5.17V　　器件位号范围：D1~D20

Module:A11_DCDC_5V_STB,2A,1.6*232　　Version:V1.0.0.0

TYPE-C

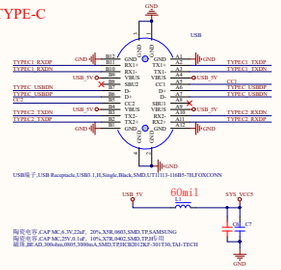

USB3.0 to TypeC

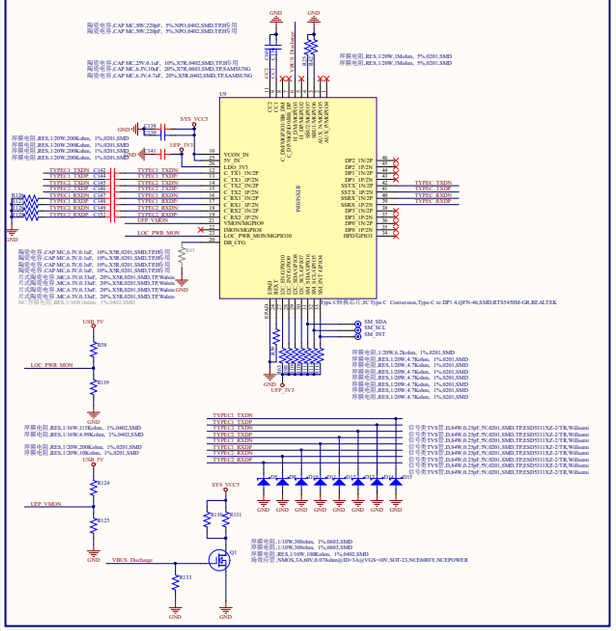

PIR&IIC

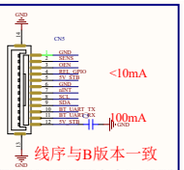

接sensor小板(I <8mA) 和 PIR小板(I <20uA)

5V to 3.3V LDO

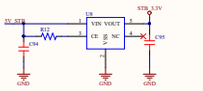

VCC_Switch

用于兼容12v 和5v 的输入

USB3.0 Redriver

差分信号组内走线长度偏差控制在5mil 以内，差分阻抗控制在90Ω；

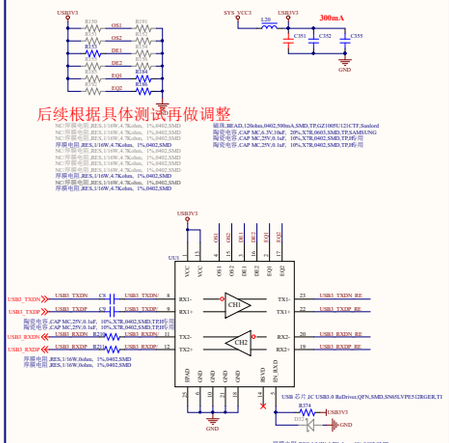

后续根据具体测试再做调整

打孔,串联阻容PCB正反面对放

IIC

FFC

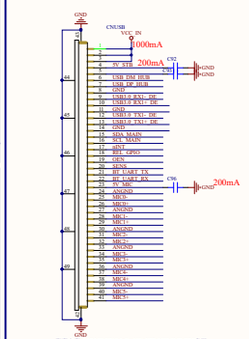

连接USB3.0 Redriver 的小板

MIC

AGND把各MIC信号和电源对包起来

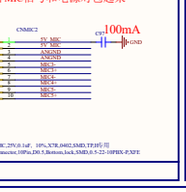

MIC

AGND把各MIC信号和电源对包起来

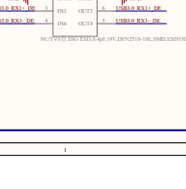

USB ESD

USB2.0 HUB

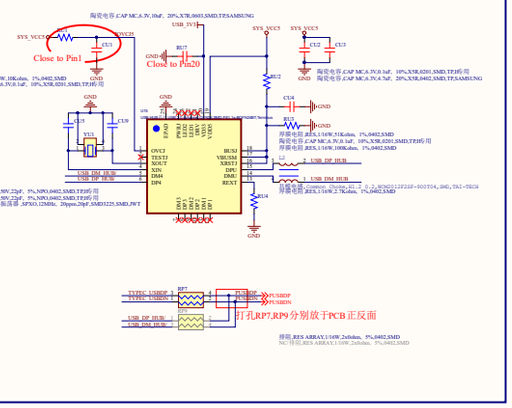

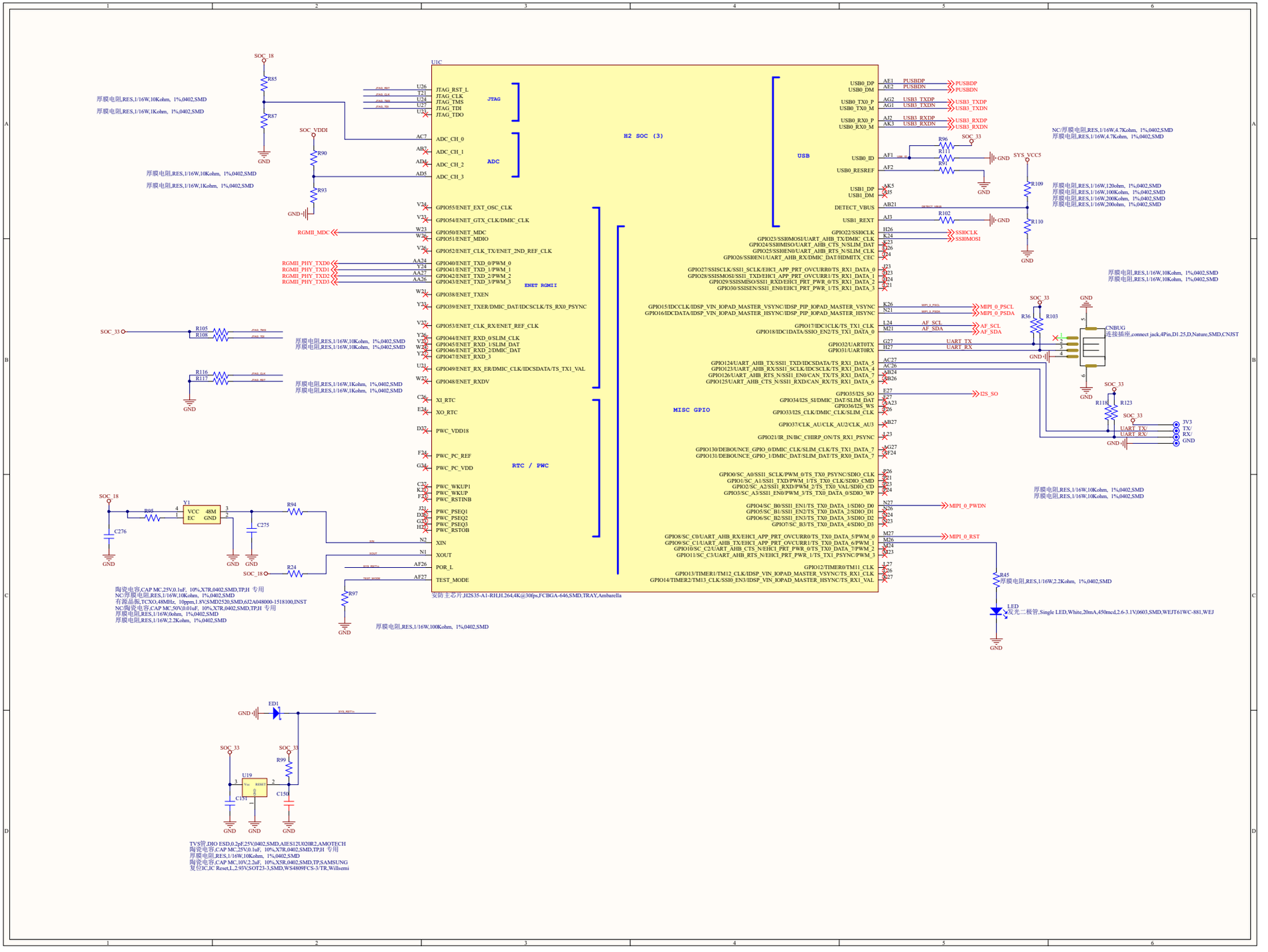
U1C
H2 SOC (3)
JTAG
ADC
ENET RGMII
RTC / PWC
USB
MISC GPIO
JTAG_RST_L U26
JTAG_CLK T21
JTAG_TMS U24
JTAG_TDI U27
JTAG_TDO U33
ADC_CH_0 AC7
ADC_CH_1 AB7
ADC_CH_2 AD4
ADC_CH_3 AD5
GPIO055/ENET_EXT_OSC_CLK V24
GPIO054/ENET_GTX_CLK/DMIC_CLK V33
GPIO050/ENET_MDC W23
GPIO051/ENET_MDIO W26
GPIO052/ENET_CLK_TX/ENET_2ND_REF_CLK V26
GPIO040/ENET_TXD_0/PWM_0 AA24
GPIO041/ENET_TXD_1/PWM_1 Y24
GPIO042/ENET_TXD_2/PWM_2 AA27
GPIO043/ENET_TXD_3/PWM_3 AA26
GPIO038/ENET_TXEN W21
GPIO039/ENET_TXER/DMIC_DAT/IDCSCLK/TS_RX0_PSYNC Y33
GPIO053/ENET_CLK_RX/ENET_REF_CLK V32
GPIO044/ENET_RXD_0/SLIM_CLK Y26
GPIO045/ENET_RXD_1/SLIM_DAT V27
GPIO046/ENET_RXD_2/DMIC_DAT W26
GPIO047/ENET_RXD_3 Y32
GPIO049/ENET_RX_ER/DMIC_CLK/IDCSDATA/TS_TX1_VAL U31
GPIO048/ENET_RXDV W32
XI_RTC C36
XO_RTC E34
PWC_VDD18 D37
PWC_PC_REF F34
PWC_PC_VDD G34
PWC_WKUP1 C37
PWC_WKUP K37
PWC_RSTINB F37
PWC_PSEQ1 J31
PWC_PSEQ2 D36
PWC_PSEQ3 G36
PWC_RSTOB H36
XIN N2
XOUT N1
POR_L AF26
TEST_MODE AF27
USB0_DP AE1 PUSBDP
USB0_DM AE2 PUSBDN
USB0_TX0_P AG2 USB3_TXDP
USB0_TX0_M AG1 USB3_TXDN
USB0_RX0_P AJ2 USB3_RXDP
USB0_RX0_M AK3 USB3_RXDN
USB0_ID AF1
USB0_RESREF AF2
USB1_DP AK5
USB1_DM AJ5
DETECT_VBUS AB21
USB1_REXT AJ3
GPIO22/SSI0CLK H26 SSI0CLK
GPIO23/SSI0MOSI/UART_AHB_TX/DMIC_CLK K24 SSI0MOSI
GPIO024/SSI0MISO/UART_AHB_CTS_N/SLIM_DAT K23
GPIO025/SSI0EN0/UART_AHB_RTS_N/SLIM_CLK G26
GPIO026/SSI0EN1/UART_AHB_RX/DMIC_DAT/HDMITX_CEC G24
GPIO027/SSISCLK/SSI1_SCLK/EHC1_APP_PRT_OVCURR0/TS_RX1_DATA_0 Y23
GPIO028/SSISMOSI/SSI1_TXD/EHC1_APP_PRT_OVCURR1/TS_RX1_DATA_1 R23
GPIO029/SSISMISO/SSI1_RXD/EHC1_PRT_PWR_0/TS_RX1_DATA_2 R24
GPIO030/SSISEN/SSI1_EN0/EHC1_PRT_PWR_1/TS_RX1_DATA_3 G21
GPIO015/IDCCLK/IDSP_VIN_IOPAD_MASTER_VSYNC/IDSP_PIP_IOPAD_MASTER_VSYNC K26 MIPI_0_PSCL
GPIO016/IDCDATA/IDSP_VIN_IOPAD_MASTER_HSYNC/IDSP_PIP_IOPAD_MASTER_HSYNC N21 MIPI_0_PSDA
GPIO17/IDC1CLK/TS_TX1_CLK L24 AF_SCL
GPIO18/IDC1DATA/SSIO_EN2/TS_TX1_DATA_0 M21 AF_SDA
GPIO32/UART0TX G27 UART_TX
GPIO31/UART0RX H27 UART_RX
GPIO124/UART_AHB_TX/SSI1_TXD/IDCSDATA/TS_RX1_DATA_5 AC27
GPIO123/UART_AHB_RX/SSI1_SCLK/IDCSCLK/TS_RX1_DATA_4 AC26
GPIO126/UART_AHB_RTS_N/SSI1_EN0/CAN_TX/TS_RX1_DATA_7 AH24
GPIO125/UART_AHB_CTS_N/SSI1_RXD/CAN_RX/TS_RX1_DATA_6 AB26
GPIO035/I2S_SO E27 I2S_SO
GPIO034/I2S_SI/DMIC_DAT/SLIM_DAT L27
GPIO036/I2S_WS A23
GPIO033/I2S_CLK/DMIC_CLK/SLIM_CLK G26
GPIO037/CLK_AU/CLK_AU2/CLK_AU3 AB27
GPIO021/IR_IN/BC_CHIRP_ON/TS_RX1_PSYNC L23
GPIO130/DEBOUNCE_GPIO_0/DMIC_CLK/SLIM_CLK/TS_TX1_DATA_7 AG27
GPIO131/DEBOUNCE_GPIO_1/DMIC_DAT/SLIM_DAT/TS_RX0_DATA_7 AF24
GPIO0/SC_A0/SSI1_SCLK/PWM_0/TS_TX0_PSYNC/SDIO_CLK G26
GPIO1/SC_A1/SSI1_TXD/PWM_1/TS_TX0_CLK/SDIO_CMD G21
GPIO2/SC_A2/SSI1_RXD/PWM_2/TS_TX0_VAL/SDIO_CD G23
GPIO3/SC_A3/SSI1_EN0/PWM_3/TS_TX0_DATA_0/SDIO_WP G24
GPIO4/SC_B0/SSI1_EN1/TS_TX0_DATA_1/SDIO_D0 N27 MIPI_0_PWDN
GPIO5/SC_B1/SSI1_EN2/TS_TX0_DATA_2/SDIO_D1 K26
GPIO6/SC_B2/SSI1_EN3/TS_TX0_DATA_3/SDIO_D2 G24
GPIO7/SC_B3/TS_TX0_DATA_4/SDIO_D3 G23
GPIO8/SC_C0/UART_AHB_RX/EHC1_APP_PRT_OVCURR0/TS_TX0_DATA_5/PWM_0 M27 MIPI_0_RST
GPIO9/SC_C1/UART_AHB_TX/EHC1_APP_PRT_OVCURR1/TS_TX0_DATA_6/PWM_1 M26
GPIO10/SC_C2/UART_AHB_CTS_N/EHC1_PRT_PWR_0/TS_TX0_DATA_7/PWM_2 M24
GPIO11/SC_C3/UART_AHB_RTS_N/EHC1_PRT_PWR_1/TS_TX1_PSYNC/PWM_3 G23
GPIO12/TIMER0/TM11_CLK L27
GPIO13/TIMER1/TM12_CLK/IDSP_VIN_IOPAD_MASTER_VSYNC/TS_RX1_CLK G26
GPIO14/TIMER2/TM13_CLK/SSI0_EN3/IDSP_VIN_IOPAD_MASTER_HSYNC/TS_RX1_VAL G27
SOC_18
R85
R87
GND
厚膜电阻,RES,1/16W,10Kohm, 1%,0402,SMD
厚膜电阻,RES,1/16W,1Kohm, 1%,0402,SMD
SOC_VDDI
R90
R93
厚膜电阻,RES,1/16W,10Kohm, 1%,0402,SMD
厚膜电阻,RES,1/16W,1Kohm, 1%,0402,SMD
RGMII_MDC
RGMII_PHY_TXD0
RGMII_PHY_TXD1
RGMII_PHY_TXD2
RGMII_PHY_TXD3
SOC_33
R105
R108
厚膜电阻,RES,1/16W,10Kohm, 1%,0402,SMD
厚膜电阻,RES,1/16W,10Kohm, 1%,0402,SMD
R116
R117
厚膜电阻,RES,1/16W,1Kohm, 1%,0402,SMD
厚膜电阻,RES,1/16W,1Kohm, 1%,0402,SMD
SOC_18
R95
Y1
VCC 48M
EC GND
C276
C275
R94
R24
R97
厚膜电阻,RES,1/16W,100Kohm, 1%,0402,SMD
陶瓷电容,CAP MC,25V,0.1uF, 10%,X7R,0402,SMD,TP,H 专用
NC/厚膜电阻,RES,1/16W,10Kohm, 1%,0402,SMD
有源晶振,TCXO,48MHz, 10ppm,1.8V,SMD2520,SMD,6J2A048000-1518100,INST
NC/陶瓷电容,CAP MC,50V,0.01uF, 10%,X7R,0402,SMD,TP,H 专用
厚膜电阻,RES,1/16W,0ohm, 1%,0402,SMD
厚膜电阻,RES,1/16W,2.2Kohm, 1%,0402,SMD
安防主芯片,H2S35-A1-RH,H.264,4K@30fps,FCBGA-646,SMD,TRAY,Ambarella
R96
SOC_33
R111
SYS_VCC5
R112
R109
R102
R110
NC/厚膜电阻,RES,1/16W,4.7Kohm, 1%,0402,SMD
厚膜电阻,RES,1/16W,4.7Kohm, 1%,0402,SMD
厚膜电阻,RES,1/16W,120ohm, 1%,0402,SMD
厚膜电阻,RES,1/16W,100Kohm, 1%,0402,SMD
厚膜电阻,RES,1/16W,200Kohm, 1%,0402,SMD
厚膜电阻,RES,1/16W,200ohm, 1%,0402,SMD
厚膜电阻,RES,1/16W,10Kohm, 1%,0402,SMD
厚膜电阻,RES,1/16W,10Kohm, 1%,0402,SMD
R36
R103
CNBUG
连接插座,connect jack,4Pin,D1.25,D,Nature,SMD,CNJST
R118
R123
3V3
TX/
RX/
GND
厚膜电阻,RES,1/16W,10Kohm, 1%,0402,SMD
厚膜电阻,RES,1/16W,10Kohm, 1%,0402,SMD
R45
厚膜电阻,RES,1/16W,2.2Kohm, 1%,0402,SMD
LED
发光二极管,Single LED,White,20mA,450mcd,2.6-3.1V,0603,SMD,WEJT61WC-881,WEJ
ED1
U19
R99
C151
C150
TVS管,DIO ESD,0.2pF,25V,0402,SMD,AIES12U020R2,AMOTECH
陶瓷电容,CAP MC,25V,0.1uF, 10%,X7R,0402,SMD,TP,H 专用
厚膜电阻,RES,1/16W,10Kohm, 1%,0402,SMD
陶瓷电容,CAP MC,10V,2.2uF, 10%,X5R,0402,SMD,TP,SAMSUNG
复位IC,IC Reset,L,2.93V,SOT23-3,SMD,WS4809FCS-3/TR,Willsemi

H2_MISC