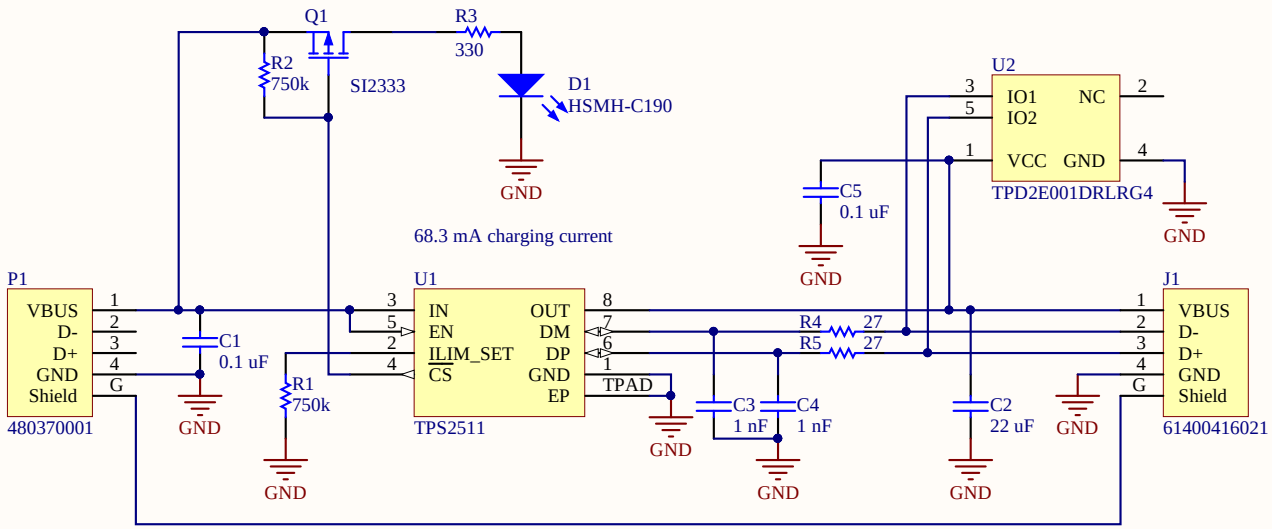

Title		
USB Trickle Charger		
Size: A	Number	Revision: 0
Date: 12/8/2016		Sheet1 of 1
File: C:\USB_charger\USB_Charger.SchDoc		Drawn By: R. Hymel

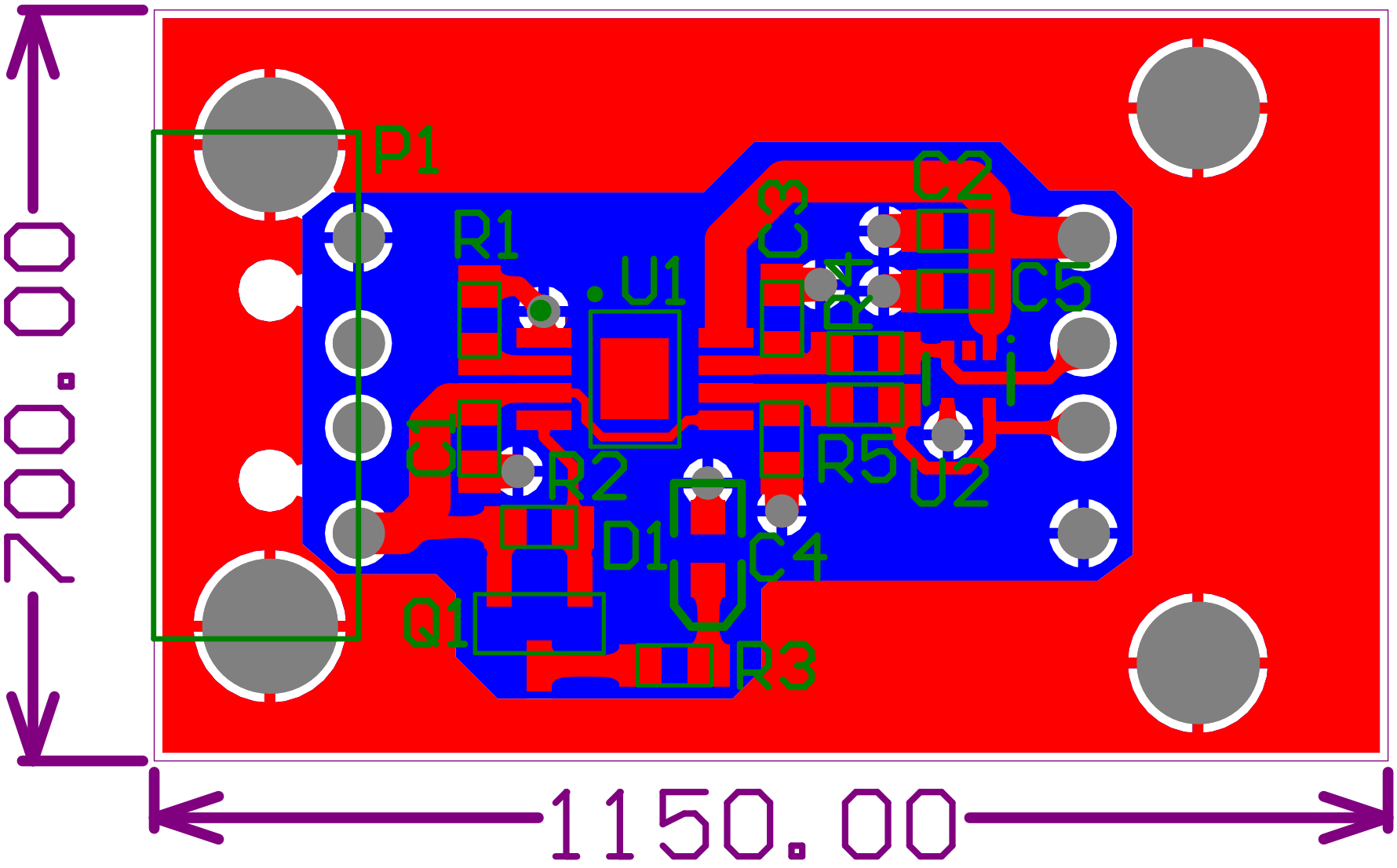
P1
R1
U1
C3
C2
C5
C1
R2
R5
U2
D1
C4
Q1
R3
700.00
1150.00