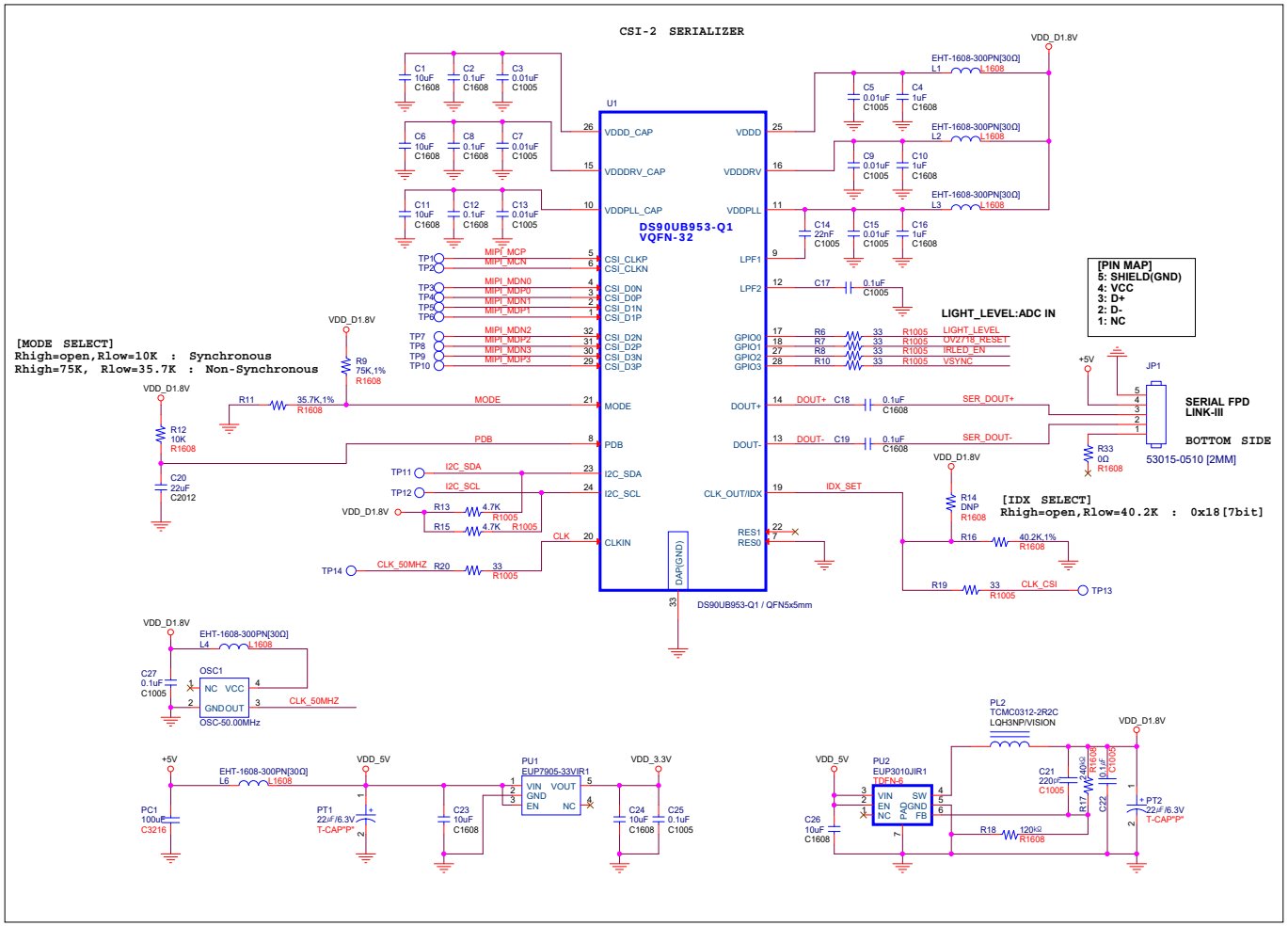

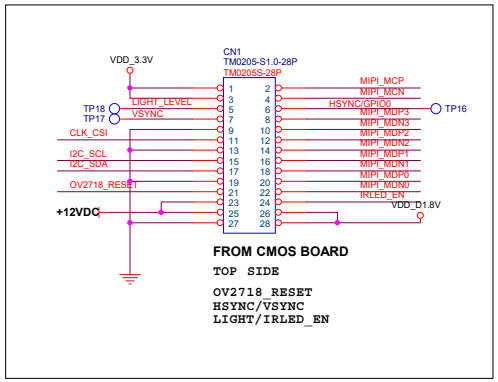

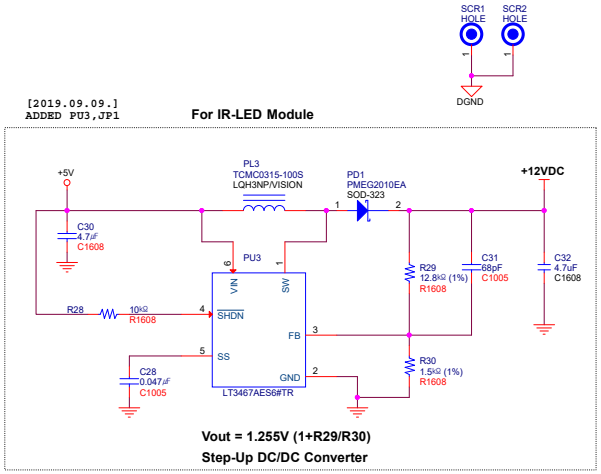

VISIONBLUE — WELDEX

Title	WDP5437M2A_CSI2 BOARD
Size C	Document Number 02 DS90UB953-Q1 SERIALIZER
Rev	V01
Date: Thursday, December 12, 2019	Sheet 2 of 2