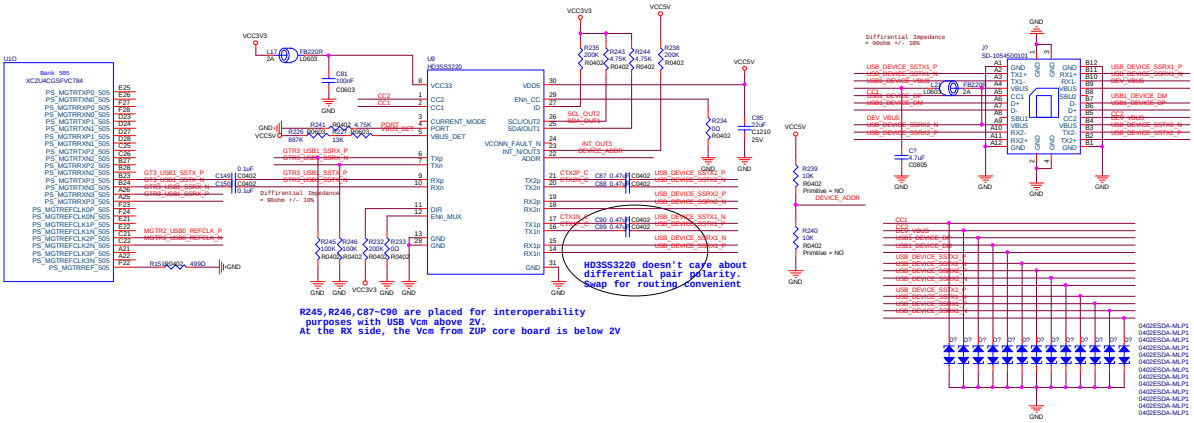

R245,R246,C87-C90 are placed for interoperability purposes with USB Vcm above 2V.
At the RX side, the Vcm from ZUP core board is below 2V