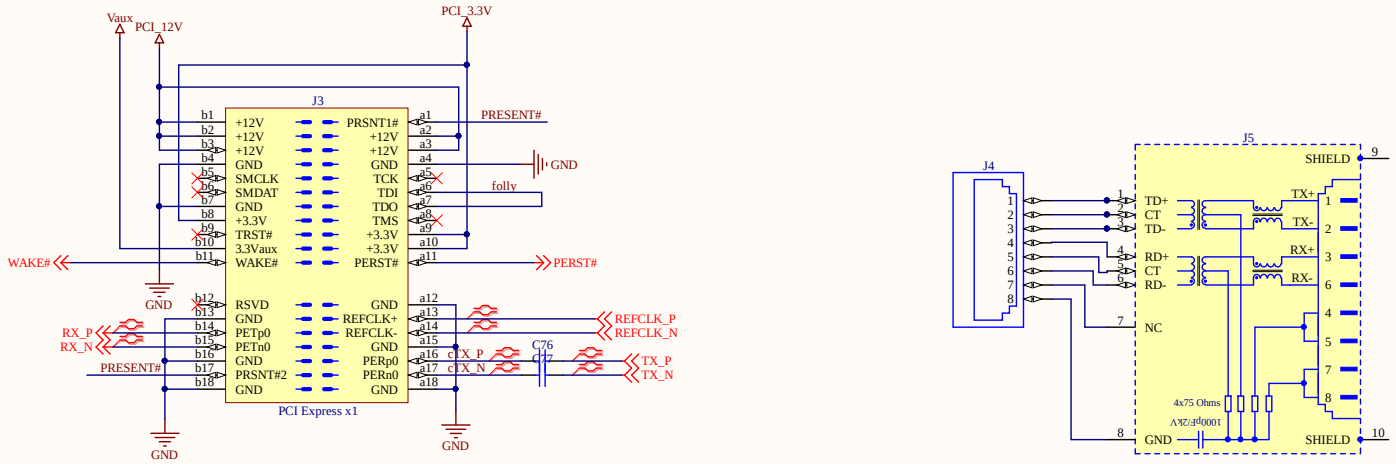

- Nominal values used, dimensions in mm
- The mounting holes and keep-out areas around them are only required when the I/O bracket is mounted on the card directly
- Component height rule and clearance rule derived from PCI_Express_CEM_r2.0.pdf, Page 84.
- Stackup is not specified in PCI_Express_CEM_r2.0.pdf, nor implemented in this template.

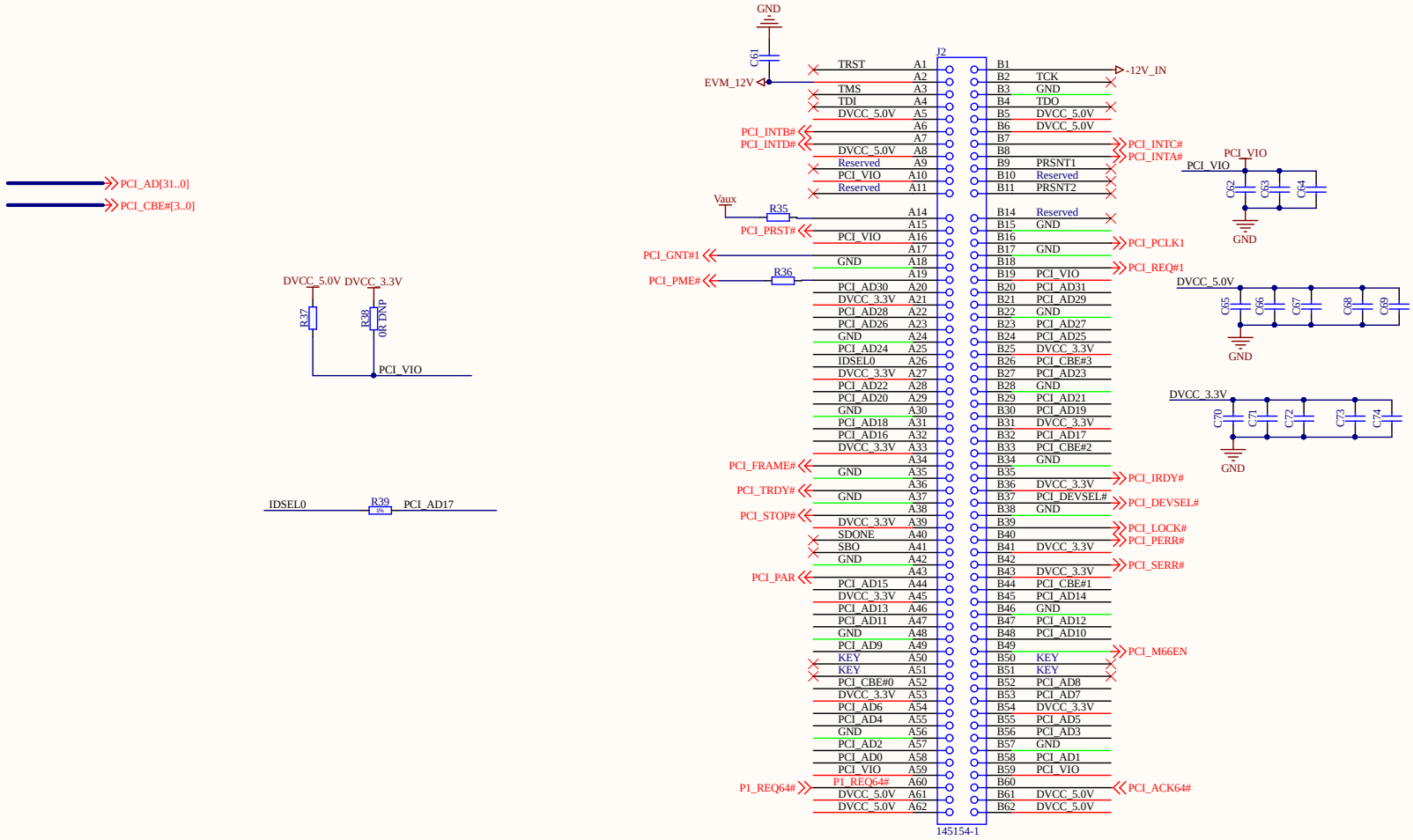
PCI_AD[31..0]
PCI_CBE#[3..0]
DVCC_5.0V DVCC_3.3V
R37
R38
0R DNP
PCI_VIO
IDSEL0
R39
0R
PCI_AD17
GND
C61
EVM_12V
Vaux
R35
R36
PCI_PRST#
PCI_GNT#1
PCI_PME#
PCI_INTB#
PCI_INTD#
PCI_FRAME#
PCI_TRDY#
PCI_STOP#
PCI_PAR
P1_REQ64#
J2
TRST A1
A2
TMS A3
TDI A4
DVCC_5.0V A5
A6
A7
DVCC_5.0V A8
Reserved A9
PCI_VIO A10
Reserved A11
A14
A15
PCI_VIO A16
A17
GND A18
A19
PCI_AD30 A20
DVCC_3.3V A21
PCI_AD28 A22
PCI_AD26 A23
GND A24
PCI_AD24 A25
IDSEL0 A26
DVCC_3.3V A27
PCI_AD22 A28
PCI_AD20 A29
GND A30
PCI_AD18 A31
PCI_AD16 A32
DVCC_3.3V A33
A34
GND A35
A36
GND A37
A38
DVCC_3.3V A39
SDONE A40
SBO A41
GND A42
A43
PCI_AD15 A44
DVCC_3.3V A45
PCI_AD13 A46
PCI_AD11 A47
GND A48
PCI_AD9 A49
KEY A50
KEY A51
PCI_CBE#0 A52
DVCC_3.3V A53
PCI_AD6 A54
PCI_AD4 A55
GND A56
PCI_AD2 A57
PCI_AD0 A58
PCI_VIO A59
P1_REQ64# A60
DVCC_5.0V A61
DVCC_5.0V A62
B1 -12V_IN
B2 TCK
B3 GND
B4 TDO
B5 DVCC_5.0V
B6 DVCC_5.0V
B7
B8
B9 PRSNT1
B10 Reserved
B11 PRSNT2
B14 Reserved
B15 GND
B16
B17 GND
B18
B19 PCI_VIO
B20 PCI_AD31
B21 PCI_AD29
B22 GND
B23 PCI_AD27
B24 PCI_AD25
B25 DVCC_3.3V
B26 PCI_CBE#3
B27 PCI_AD23
B28 GND
B29 PCI_AD21
B30 PCI_AD19
B31 DVCC_3.3V
B32 PCI_AD17
B33 PCI_CBE#2
B34 GND
B35
B36 DVCC_3.3V
B37 PCI_DEVSEL#
B38 GND
B39
B40
B41 DVCC_3.3V
B42
B43 DVCC_3.3V
B44 PCI_CBE#1
B45 PCI_AD14
B46 GND
B47 PCI_AD12
B48 PCI_AD10
B49
B50 KEY
B51 KEY
B52 PCI_AD8
B53 PCI_AD7
B54 DVCC_3.3V
B55 PCI_AD5
B56 PCI_AD3
B57 GND
B58 PCI_AD1
B59 PCI_VIO
B60
B61 DVCC_5.0V
B62 DVCC_5.0V
PCI_INTC#
PCI_INTA#
PCI_PCLK1
PCI_REQ#1
PCI_IRDY#
PCI_DEVSEL#
PCI_LOCK#
PCI_PERR#
PCI_SERR#
PCI_M66EN
PCI_ACK64#
145154-1
PCI_VIO
C62
C63
C64
GND
DVCC_5.0V
C65
C66
C67
C68
C69
GND
DVCC_3.3V
C70
C71
C72
C73
C74
GND

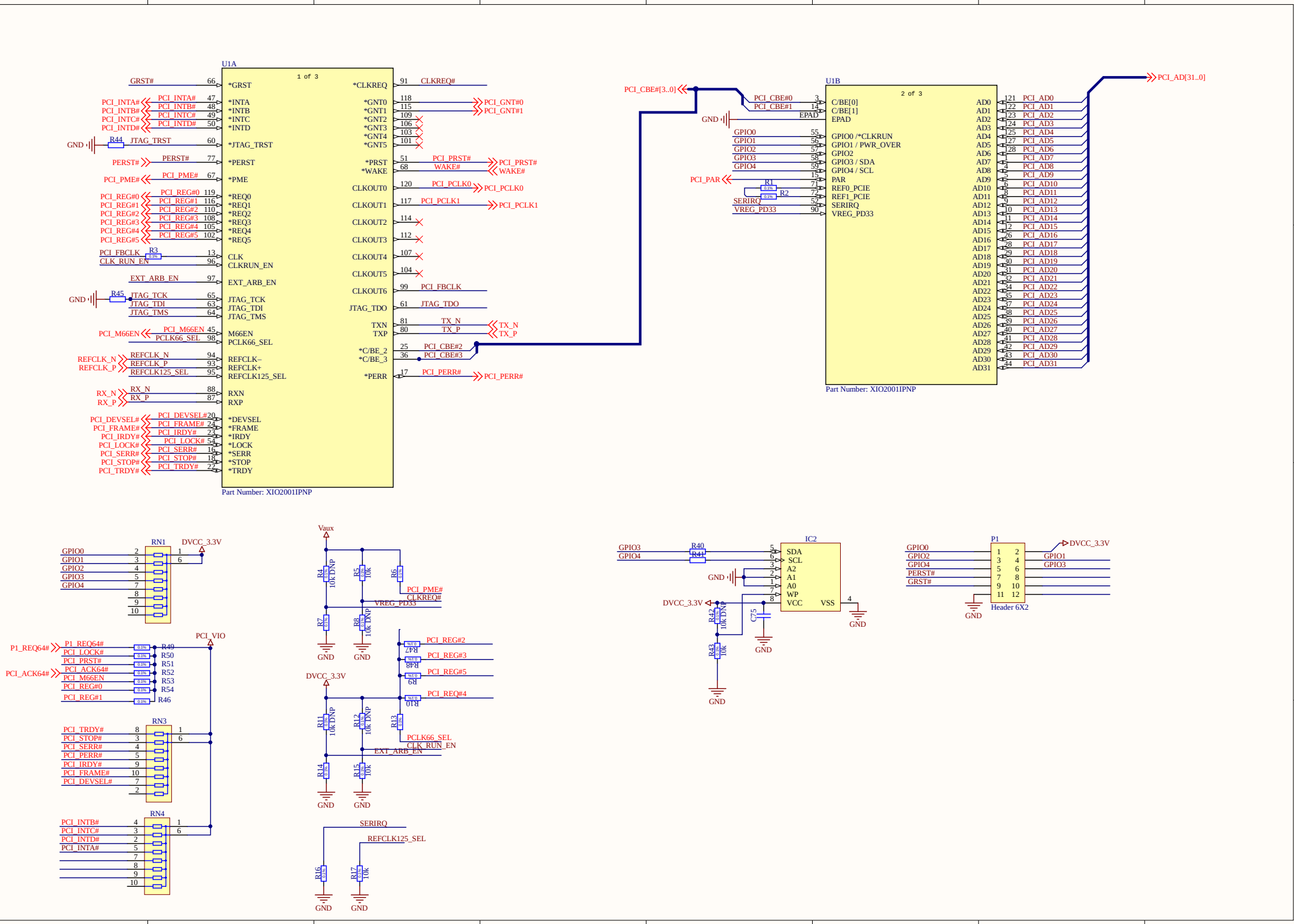
U1A
1 of 3
Part Number: XIO2001IPNP
U1B
2 of 3
Part Number: XIO2001IPNP
PCI_AD[31..0]
PCI_CBE#[3..0]
RN1
RN3
RN4
P1
Header 6X2
IC2
Vaux
DVCC_3.3V
PCI_VIO
GND

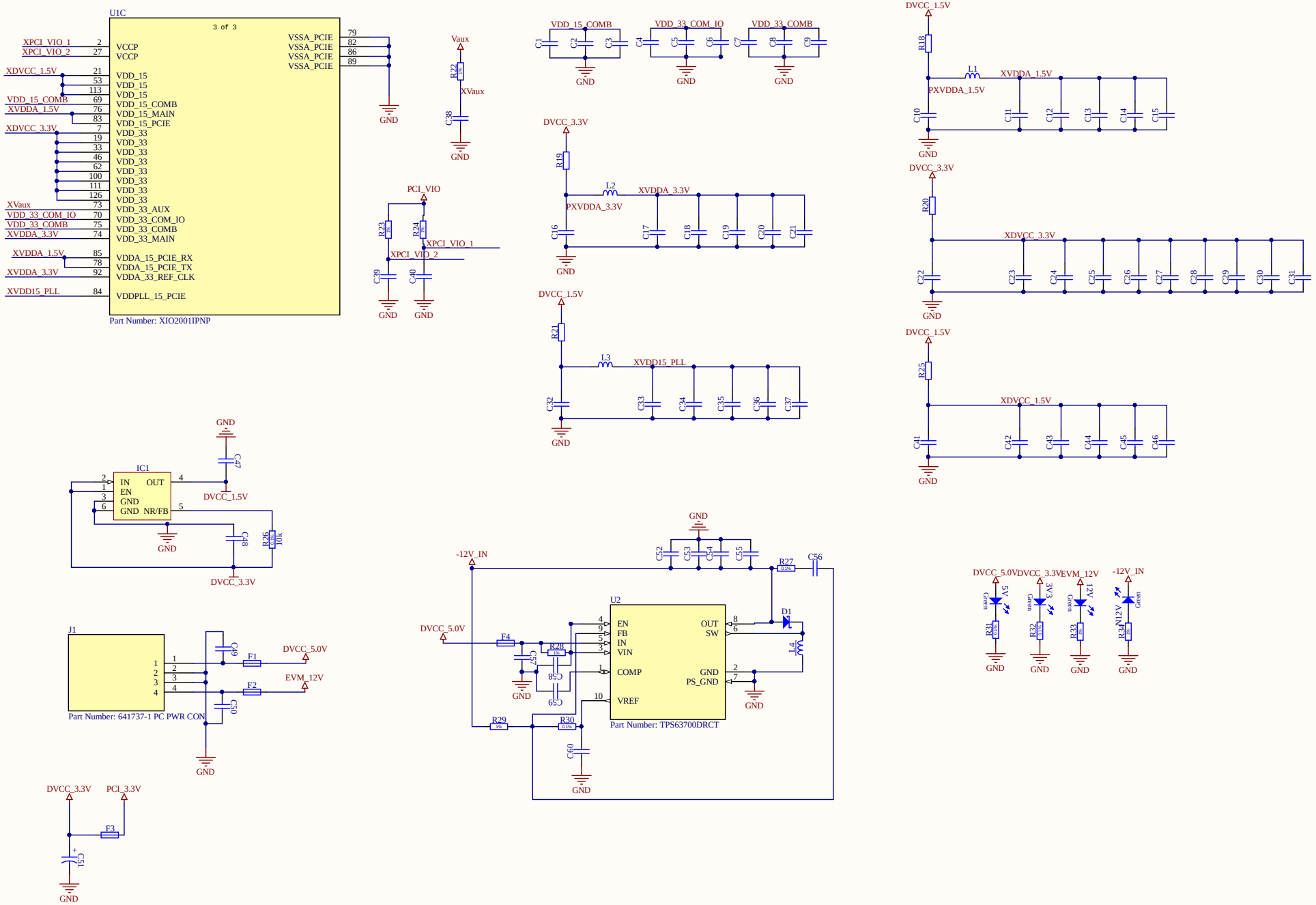
U1C
3 of 3
XPCI_VIO_1
XPCI_VIO_2
XDVCC_1.5V
VDD_15_COMB
XVDDA_1.5V
XDVCC_3.3V
XVaux
VDD_33_COM_IO
VDD_33_COMB
XVDDA_3.3V
XVDDA_1.5V
XVDDA_3.3V
XVDD15_PLL
VCCP
VCCP
VDD_15
VDD_15
VDD_15
VDD_15_COMB
VDD_15_MAIN
VDD_15_PCIE
VDD_33
VDD_33_AUX
VDD_33_COM_IO
VDD_33_COMB
VDD_33_MAIN
VDDA_15_PCIE_RX
VDDA_15_PCIE_TX
VDDA_33_REF_CLK
VDDPLL_15_PCIE
VSSA_PCIE
Part Number: XIO2001IPNP
Vaux
XVaux
PCI_VIO
XPCI_VIO_1
XPCI_VIO_2
VDD_15_COMB
VDD_33_COM_IO
VDD_33_COMB
DVCC_1.5V
XVDDA_1.5V
PXVDDA_1.5V
DVCC_3.3V
XVDDA_3.3V
PXVDDA_3.3V
XDVCC_3.3V
DVCC_1.5V
XVDD15_PLL
DVCC_1.5V
XDVCC_1.5V
GND
IC1
IN
EN
GND
GND
OUT
NR/FB
DVCC_1.5V
DVCC_3.3V
J1
Part Number: 641737-1 PC PWR CON
DVCC_5.0V
EVM_12V
DVCC_3.3V
PCI_3.3V
-12V_IN
DVCC_5.0V
U2
EN
FB
IN
VIN
COMP
VREF
OUT
SW
GND
PS_GND
Part Number: TPS63700DRCT
D1
DVCC_5.0V
DVCC_3.3V
EVM_12V
-12V_IN
5V
3V3
12V
N12V
Green