CAMERA2

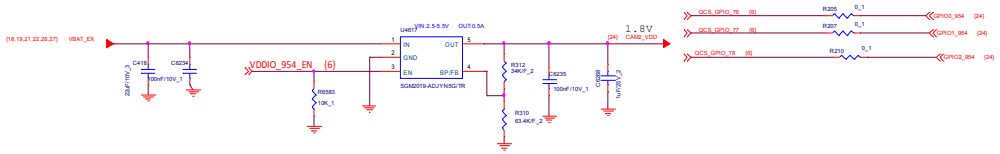
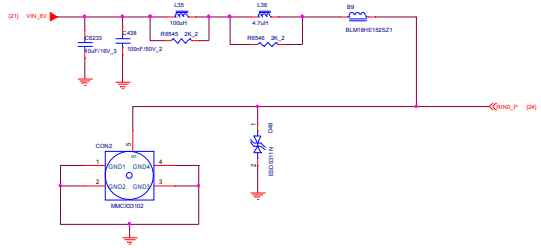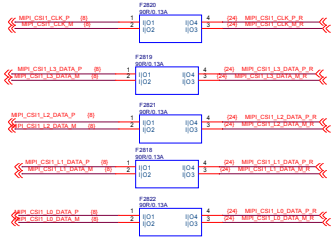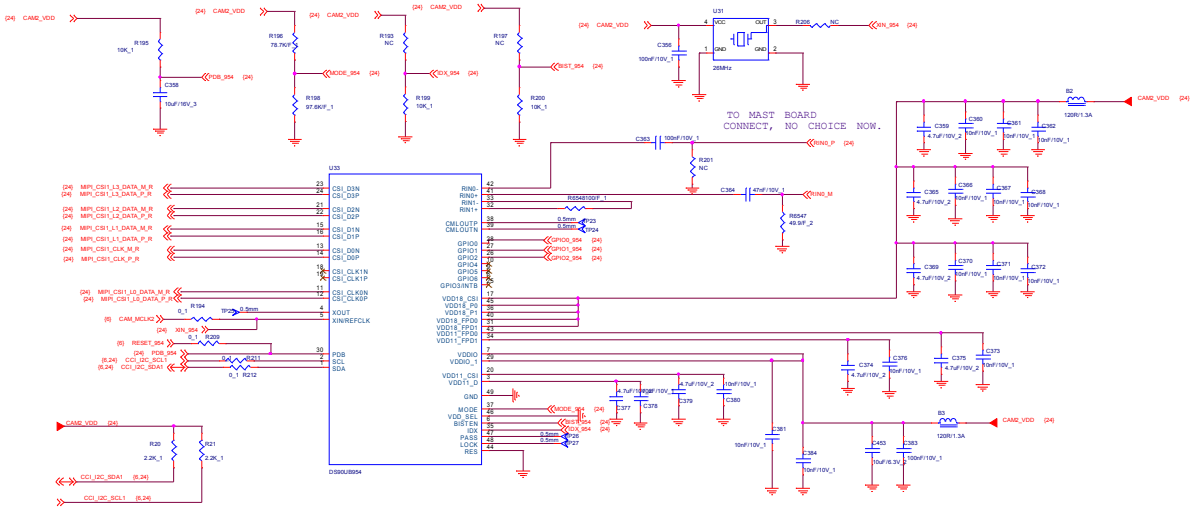
Note1: VOUT = (R1 + R2)/ R2 × 1.207