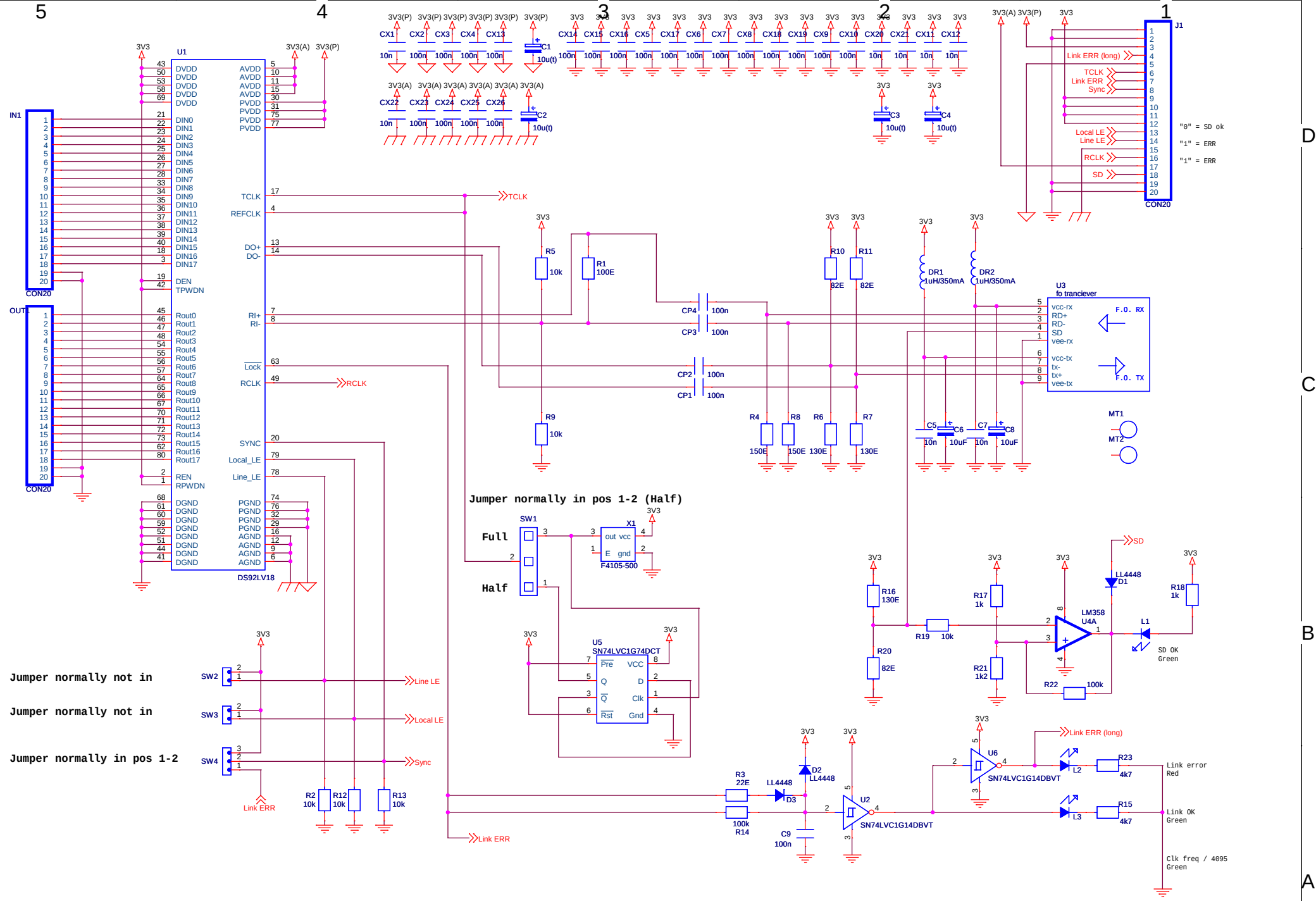

Rev.	Date	Reason for issue	Dwn.	Chk.
C	12-12-2019	Rev -01C of board - MAX9376 level converter removed	JB	HSM
B	29-7-2019	Rev -01B of board - LVPECL ac coupled	JB	HSM
A	23-9-2019	For production	JB	HSM

MacArtney A/S
Gl. Guldagervej 48
DK-6710 Esbjerg V
www.macartney.com

MacArtney UNDERWATER TECHNOLOGY

Page: 1 of 1
Drawn: JB 24-9-2019
Chk.: HSM 24-9-2019
Drawing no.: 181019-01
Rev.: C
Reference: —

Description: MUX18
PCB No. 1801019-01C