DISPLAYPORT v1.1a RECLOCKER
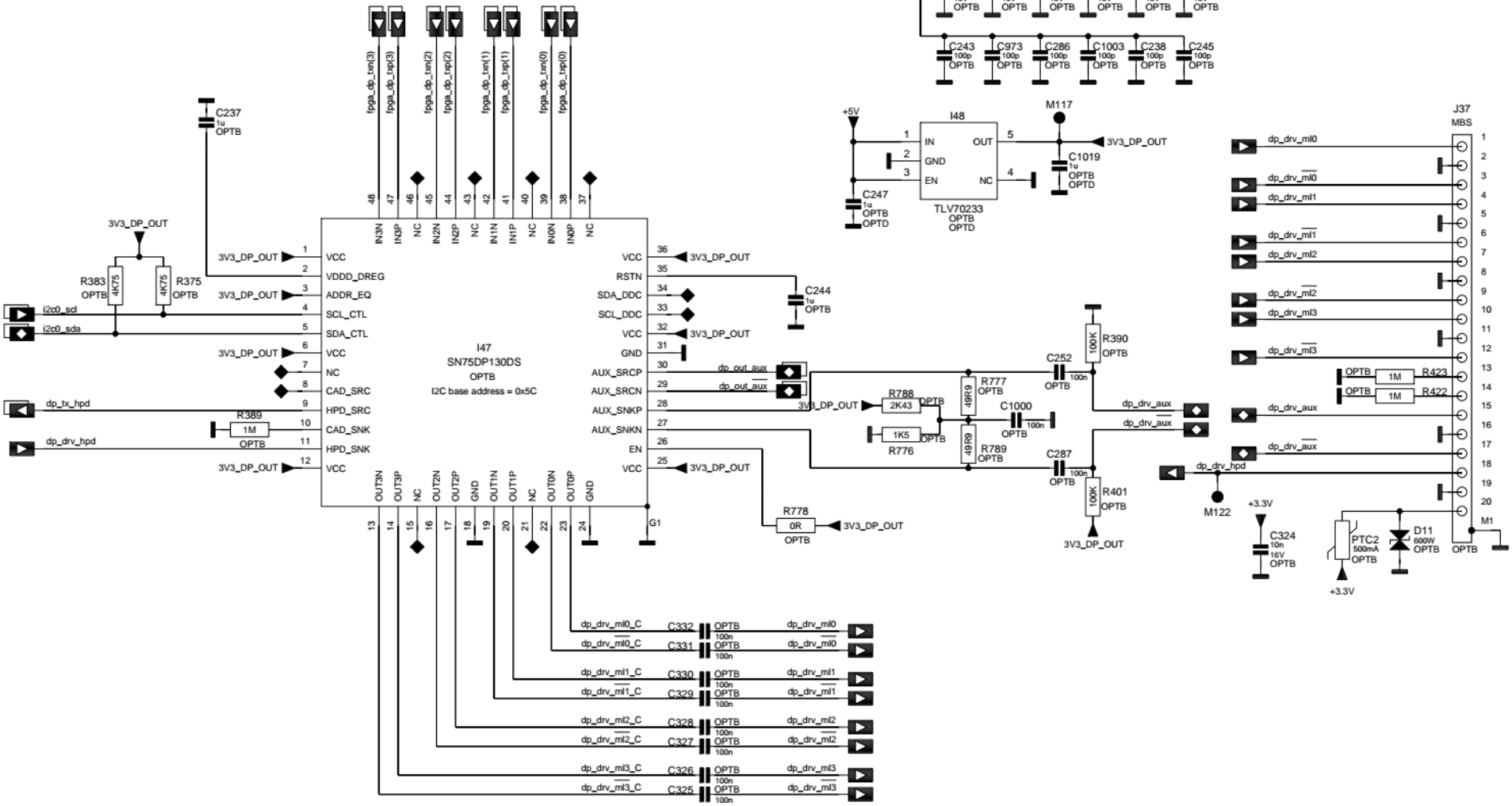
rev.00: clean up provisions for migration to DP140 chip. TI removed the DP140 chip from its roadmap.