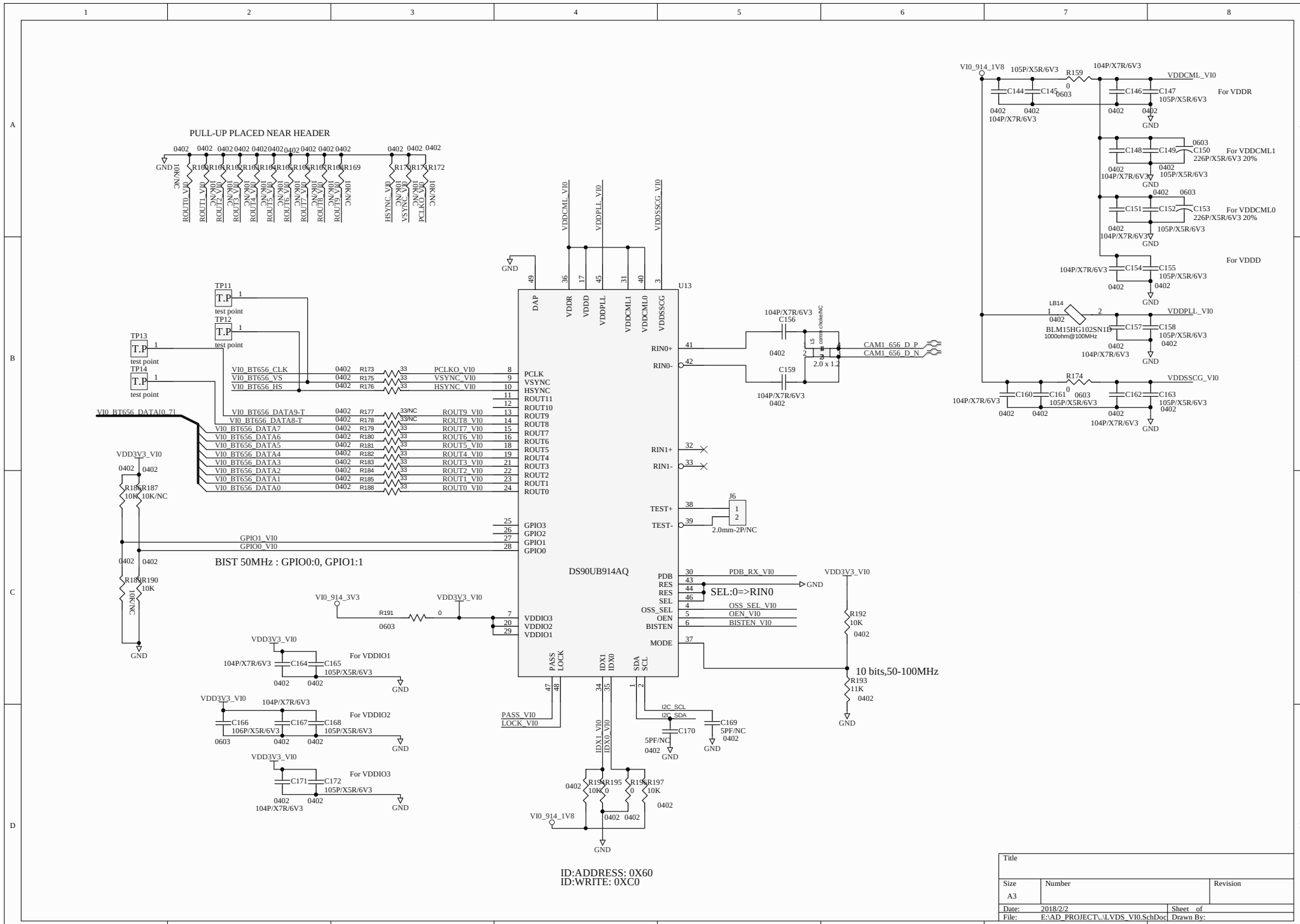
PULL-UP PLACED NEAR HEADER
DS90UB914AQ
U13
BIST 50MHz : GPIO0:0, GPIO1:1
SEL:0=>RIN0
10 bits,50-100MHz
ID:ADDRESS: 0X60
ID:WRITE: 0XC0
For VDDR
For VDDCML1
For VDDCML0
For VDDD
For VDDIO1
For VDDIO2
For VDDIO3
CAM1_656_D_P
CAM1_656_D_N
VI0_BT656_DATA[0..7]
BLM15HG102SN1D
1000ohm@100MHz
2.0mm-2P/NC
Title
Size
A3
Number
Revision
Date: 2018/2/2
Sheet of
File: E:\AD_PROJECT\..\LVDS_VI0.SchDoc
Drawn By:

PULL-DOWN (DIN0-11, HS, VS, PCLK, CLKIN) CLOSE TO IC

PULL-DOWN (CLKO, GPO0, GPO1) CLOSE TO JP1 HEADER

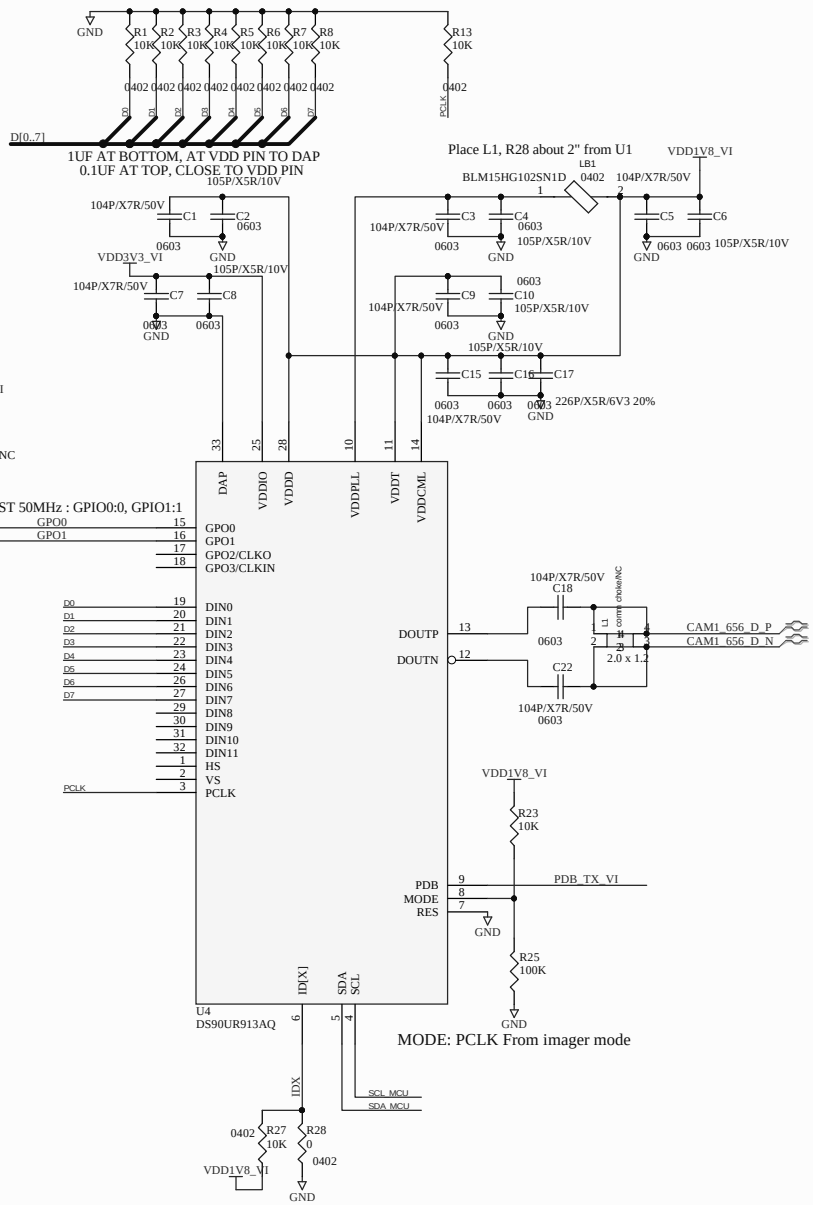

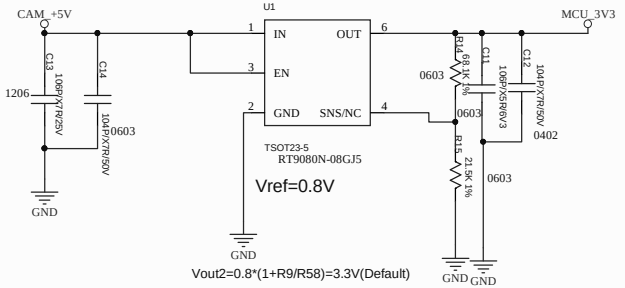

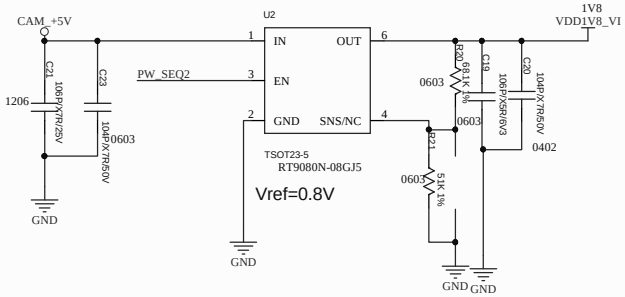

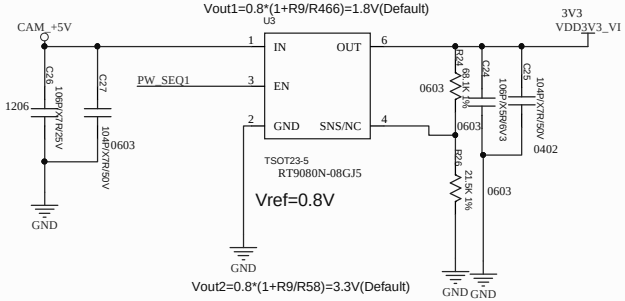

Power Up SEQ :

PW_SEQ1: 0->1(VDDIO,3V3)

PW_SEQ2: 0->1(VDDn,1V8)

PDB: 0->1

Title		
Size A3	Number	Revision
Date: 2018/2/2	Sheet of	
File: E:\AD_PROJECT\..\Samly-CAM-943-REV.SchDoc	Drawn By:	